Intel® RealSense™ Product Family D400 Series

Datasheet

Intel® RealSense™ Vision Processor D4, Intel® RealSense™ Vision Processor D4 Board, Intel® RealSense™ Vision Processor D4 Board V3, Intel® RealSense™ Depth Module D410, Intel® RealSense™ Depth Module D415, Intel® RealSense™ Depth Camera D415, Intel® RealSense™ Depth Module D430, Intel® RealSense™ Depth Module D450, Intel® RealSense™ Depth Module D401, Intel® RealSense™ Depth Camera D435, Intel® RealSense™ Depth Camera D435i, Intel® RealSense™ Depth Camera D455, Intel® RealSense™ Depth Camera D405, Intel® RealSense™ Depth Camera D435f

Revision 013

April 2022

Intel products described herein. You agree to grant Intel a non-exclusive, royalty-free license to any patent claim thereafter drafted which includes subject matter disclosed herein.

No license (express or implied, by estoppel or otherwise) to any intellectual property rights is granted by this document.

Intel technologies' features and benefits depend on system configuration and may require enabled hardware, software, or service activation. Performance varies depending on system configuration. No computer system can be absolutely secure. Check with your system manufacturer or retailer or learn more at intel.com.

Intel technologies may require enabled hardware, specific software, or services activation. Check with your system manufacturer or retailer.

The products described may contain design defects or errors known as errata which may cause the product to deviate from published specifications. Current characterized errata are available on request.

Intel disclaims all express and implied warranties, including without limitation, the implied warranties of merchantability, fitness for a particular purpose, and non-infringement, as well as any warranty arising from course of performance, course of dealing, or usage in trade.

All information provided here is subject to change without notice. Contact your Intel representative to obtain the latest Intel product specifications and roadmaps.

Copies of documents which have an order number and are referenced in this document may be obtained by calling 1-800-548-4725 or visit www.intel.com/design/literature.htm.

Intel and the Intel logo, Intel® Core™, Intel® Atom™, trademarks of Intel Corporation in the U.S. and/or other countries.

*Other names and brands may be claimed as the property of others.

© 2022 Intel Corporation. All rights reserved.

Document Number: 337029-013

Contents

1 Description and Features 13

2 Introduction 15

2.1 Purpose and Scope of this Document 15
2.2 Terminology 15
2.3 Stereo Vision Depth Technology Overview 16
2.4 Camera System Block Diagram 18
2.5 Intel® RealSense™ Depth Module D400 series Product SKUs 19
2.6 Intel® RealSense™ Depth Camera D400 series Product SKUs 20

3 Component Specification 21

3.1 Vision Processor D4 Camera System Components 21
3.2 Host Processor 21
3.3 Intel® RealSense™ Vision Processor D4 21
3.3.1 Vision Processor D4 Features 22
3.3.2 Vision Processor D4 Signal Description 22
3.3.3 Vision Processor D4 Package Mechanical Attributes 28
3.3.4 Vision Processor D4 Power Requirements 33
3.3.5 Vision Processor D4 Power Sequencing 33
3.3.6 Vision Processor D4 Spec Code 34
3.3.7 Vision Processor D4 Storage and Operating Conditions 34
3.3.8 Vision Processor D4 Thermals 35
3.4 Clock 35
3.5 Serial (SPI) Flash Memory 35
3.6 Stereo Depth Module 35
3.6.1 Left and Right Imagers 38
3.6.2 Infrared Projector 40
3.6.3 Color Sensor 41
3.6.4 Depth Module Connector 43
3.6.5 Stereo Depth Module Label 43
3.6.6 Stiffener 44
3.6.7 Temperature Sensor 44
3.6.8 Other Stereo Depth Module Components 44
Mechanical Dimensions 45
3.6.9 45
3.6.10 Stereo Depth Module Power Sequence 46
3.6.11 Stereo Depth Module Storage and Powered Conditions 46
3.7 Intel® RealSense™ Vision Processor D4 Board 47
3.7.1 Mechanical Dimensions 48
3.7.2 Depth Module Receptacle 49
3.7.3 Flex and Rigid Interposer Interconnect 49
3.7.4 External Sensor Sync Connector 58
3.7.5 USB Peripheral Connector – Type-C – D415, D435, D435i, D435f, D455 58
3.7.6 USB Peripheral Connector – Micro-B (D405) 60
3.7.7 Color Image Signal Processor (ISP) 61
3.7.8 Vision Processor D4 Board Power Requirements 61
3.7.9 Vision Processor D4 Board Thermals 61
3.7.10 Vision Processor D4 Board Storage and Powered Conditions 62

3.7.11 Intel® RealSense™ Vision Processor D4 Board Product Identifier and Material Code ... 62
3.8 Intel® RealSense™ Depth Camera D400 Series ... 63
3.8.1 Depth Camera D400 Series Mechanical Dimensions ... 66
3.8.2 Depth Camera D400 Series Thermals ... 67
3.8.3 Depth Camera D400 Series Product Identifier and Material Code ... 68
3.8.4 Camera Lens Cleaning Procedure ... 69

4 Functional Specification ... 70
4.1 Vendor Identification (VID) and Device Identification (DID) ... 70
4.2 Vision Processor D4 Data Streams ... 70
4.3 Depth Field of View (FOV) ... 77
4.4 Depth Field of View at Distance (Z) ... 78
4.5 Invalid Depth Band ... 79
4.6 Minimum-Z Depth ... 80
4.7 Depth Quality Specification ... 80
4.8 Depth Start Point (Ground Zero Reference) ... 82
4.8.1 Depth Origin X-Y Coordinates ... 85
4.9 Depth Camera Functions ... 88
4.10 Color Camera Functions ... 89
IMU Specifications ... 90
4.11 90

5 Firmware ... 92
5.1 Update ... 92
5.1.1 Update Limits ... 92
5.2 Recovery ... 92

6 Software ... 93
6.1 Intel® RealSense™ Software Development Kit 2.0 ... 93

7 System Integration ... 94
7.1 System Level Block Diagram ... 94
7.2 System Level Block Diagram ... 95
7.2.1 Vision Processor D4 Board ... 95
7.2.2 Vision Processor D4 on Motherboard ... 96
7.3 D4 Camera System Power Delivery ... 97
7.4 Thermals ... 98
7.5 Stereo Depth Module Flex ... 102
7.6 Stereo Depth Module Mounting Guidance ... 103
7.6.1 Screw Mounting/End Mounting ... 103
7.6.2 Bracket Mounting/Mid-Module Mounting ... 104
7.6.3 Stereo Depth Module Air gap ... 106
7.7 Thermal Interface Material ... 107
7.8 Heat Sink ... 107
7.9 Cover Design and Material Guidance ... 107
7.10 Gaskets ... 108
7.10.1 Optical Isolation ... 110
7.10.2 Dust Protection ... 110
7.11 Firmware Recovery ... 110
7.12 Calibration Support ... 111
7.13 Multi-Camera Hardware Sync ... 111

7.14 Handling Conditions 112

8 Platform Design Guidelines 113

8.1 Vision Processor D4 on Motherboard 113
8.2 Kaby Lake U and Kaby Lake Y platforms 114
8.2.1 Kaby Lake Platform Introduction 114
8.2.2 Supported PCB Stack-Up and Routing Geometries 114
8.2.3 Vision Processor D4 on Motherboard with USB Host Interface 115
8.2.4 Vision Processor D4 on Motherboard with MIPI Host Interface 116
8.2.5 Vision Processor D4 Board for Integrated Peripheral (USB 3.1 Gen 1 Host to Vision Processor D4 Routing) 118
8.2.6 USB2.0 Design Guidelines (USB2 Host to Vision Processor D4 Routing) 119
8.3 Cherry Trail T4 Platform 120
8.3.1 Cherry Trail T4 Platform Introduction 120
8.3.2 Vision Processor D4 Platform Design Guidelines 120

9 Regulatory Compliance 122

9.1 System Laser Compliance 122
9.1.1 Certification Statement 122
9.1.2 Explanatory Label 122
9.1.3 Cautionary Statements 122
9.1.4 US FDA Accession Number 123
9.2 Regulatory Compliance 123
9.2.1 Manufacturer's Information 123
9.2.2 EU Single Place of Contact 123
9.2.3 UK Single Place of Contact 124
9.2.4 NRTL Statement 124
9.2.5 FCC Part 15 Declaration of Conformity 124
9.2.6 Canada 125
9.2.7 European Directives 125
9.2.8 UK 126
9.2.9 Australia 126
9.2.10 Japan 126
9.2.11 South Korea 126
9.2.12 Customs Union 127
9.3 Ecology Compliance 127
9.3.1 China RoHS Declaration 127
9.3.2 Waste Electrical and Electronic Equipment (WEEE) 128
9.3.3 Turkey 128

10 Mechanical Drawings 129

11 Connector Drawings 141

12 Appendix A – Vision Processor D4 on Motherboard Schematic Checklist 143

12.1 Power Delivery 150

13 Appendix B – Cover Material 153

Figures

Figure 2-1. Active Infrared (IR) Stereo Vision Technology 17

Figure 2-2. Depth Measurement (Z) versus Range (R) 17
Figure 2-3. Vision Processor D4 Camera System Block Diagram 18
Figure 3-1. Vision Processor D4 Package Drawing 29
Figure 3-2. Vision Processor D4 Ball-out 30
Figure 3-3. Vision Processor D4 Power Sequencing 34
Figure 3-4. Stereo Depth Module (Intel® RealSense™ Depth Module D410) 36
Figure 3-5. Stereo Depth Module (Intel® RealSense™ Depth Module D430) 36
Figure 3-6. Stereo Depth Module (Intel® RealSense™ Depth Module D450) 36
Figure 3-7. Stereo Depth Module (Intel® RealSense™ Depth Module D401) 37
Figure 3-8. Stereo Depth Module Power Sequence 46
Figure 3-9. Vision Processor D4 Board (V1 and V3) (USB Peripheral Type-C) 48
Figure 3-10. Vision Processor D4 Board (V4) (USB3 Peripheral Micro-B) 48
Figure 3-11. Flex Interposer – D415, D435, D435i, D435f, D455 (Illustration) 50
Figure 3-12. Rigid Interposer – D415, D435, D435i, D435f, D455 (Illustration) 50
Figure 3-13. Depth Module Receptacle and Plug Connector Pin Position – D415, D435, D435i, D435f, D455 51
Figure 3-14. Depth Module Connector Orientation and Pin Position – D415, D435, D435i, D435f, D455 53
Figure 3-15. Flex Interposer – D401 (Illustration) 54
Figure 3-16. Depth Module Receptacle and Plug Connector Pin Position – D401 54
Figure 3-17. Depth Module Connector Orientation and Pin Position – D401 57
Figure 3-18. USB Type-C Receptacle Pin Map 59
Figure 3-19. USB3 Micro-B Receptacle Pin Map 60
Figure 3-20. Intel® RealSense™ Depth Camera D415 63
Figure 3-21. Intel® RealSense™ Depth Camera D435/D435i 63
Figure 3-22. Intel® RealSense™ Depth Camera D455 63
Figure 3-23. Intel® RealSense™ Depth Camera D405 63
Figure 4-1. Depth Field of View to Depth Map illustration 78
Figure 4-2. Left Invalid Depth Band 79
Figure 4-3. Depth Module Depth Start Point Reference 82
Figure 4-4. Depth Camera Depth Start Point Reference 84
Figure 4-5. Depth Module X-Y Depth Origin Reference – D410, D415, D430, D450 85
Figure 4-6. Depth Module X-Y Depth Origin Reference – D401 86
Figure 4-7. Depth Camera X-Y Depth Origin Reference – D415, D435/D435i/D435f, D455 87
Figure 4-8. Depth Camera X-Y Depth Origin Reference – D405 88
Figure 7-1. System Block Diagram – D415, D435, D435i, D455 94
Figure 7-2. System Block Diagram – D405 95
Figure 7-3. Intel® RealSense™ Vision Processor D4 Board – V1, V3 96
Figure 7-4. Intel® RealSense™ Vision Processor D4 Board – V4 96
Figure 7-5. Vision Processor D4 on Motherboard (Illustration) 97
Figure 7-6. D4 Camera System Power Scheme 98
Figure 7-7. Bottom Stiffener Depth Module D410/D415 102
Figure 7-8. Bottom Stiffener Depth Module D430 102
Figure 7-9. Bottom Stiffener Depth Module D450 102
Figure 7-10. Bottom Stiffener Depth Module D401 102
Figure 7-11. Stereo Depth Module Screw Mounting/End Mounting – D410 103
Figure 7-12. Stereo Depth Module Screw Mounting/End Mounting – D430 104
Figure 7-13. Stereo Depth Module Bracket example for D415 105
Figure 7-14. Stereo Depth Module Bracket Mount – D415 105
Figure 7-15. Stereo Depth Module Mid-Mounting – D401 106
Figure 7-16. Stereo Depth Module Air Gap 107
Figure 7-17. Illustration of Gasket Placement and Cover Material 109
Figure 7-18. Example of Light Leakage Effects 110
Figure 7-19. Firmware Recovery Sequence 111
Figure 7-20. External Sensor Sync Connector Location on D4 Vision Processor V1 and V3 Board 111

Figure 7-21. External Sensor Sync Connector Location on Depth Camera D435/D435i/D455 112
Figure 8-1. Vision Processor D4 with USB Host Interface 113
Figure 8-2. Vision Processor D4 with MIPI Host Interface 113
Figure 8-3. Vision Processor D4 on Board for USB Integrated Peripheral 114
Figure 8-4. Host Processor - Vision Processor D4 115
Figure 8-5. Vision Processor D4 Transmit - Host Receive 116
Figure 8-6. Stereo Depth Transmit - Vision Processor D4 Receive 117
Figure 8-7. Flex Interposer PCB Stack-Up 118
Figure 8-8. USB 3.1 Gen 1 Host to Vision Processor D4 Topology 118
Figure 8-9. USB2.0 Host to Vision Processor D4 119
Figure 9-1. NRTL Certifications 124
Figure 10-1. Intel® RealSense™ Depth Module D410 129
Figure 10-2. Intel® RealSense™ Depth Module D415 130
Figure 10-3. Intel® RealSense™ Depth Module D430 131
Figure 10-4. Intel® RealSense™ Depth Module D450 132
Figure 10-5. Intel® RealSense™ Depth Module D401 133
Figure 10-6. Vision Processor D4 Board USB Type-C (Intel® RealSense™ Vision Processor D4 Board – V1 and V3) 134
Figure 10-7. Vision Processor D4 Board USB Micro-B (Intel® RealSense™ Vision Processor D4 Board – V4) 135
Figure 10-8. Intel® RealSense™ Depth Camera D415 136
Figure 10-9. Intel® RealSense™ Depth Camera D435/D435i 137
Figure 10-10. Intel® RealSense™ Depth Camera D455 139
Figure 10-11. Intel® RealSense™ Depth Camera D405 140
Figure 11-1. Receptacle Mechanical Drawing (50-Pin Depth Module Receptacle) 141
Figure 11-2. Plug Mechanical Drawing (50-Pin Depth Module Plug) 142
Figure 12-1. Vision Processor D4 Laser PWM Reference Platform Schematic 150
Figure 12-2. Vision Processor D4 24 MHz Crystal Clock Reference Platform Schematic 150
Figure 12-3. DC-DC Reference Platform Schematic (3.3 V, 1.8 V, 0.9 V) 151
Figure 12-4. Vision Processor D4 VDD_PG and AVDD Reference Platform Schematic 152

Tables

Table 2-1. Depth Module Product SKU Descriptions 19
Table 2-2. Depth Camera Product SKU Descriptions 20
Table 3-1. Component Descriptions 21
Table 3-2. Vision Processor D4 Signal Descriptions 22
Table 3-3. Hardware Straps 27
Table 3-4. Vision Processor D4 Package Mechanical Attributes 28
Table 3-5. Vision Processor D4 Ball-out by Signal Name 30
Table 3-6. Vision Processor D4 Power Requirements 33
Table 3-7. Vision Processor D4 Power Sequencing Timing Parameters 33
Table 3-8. Vision Processor D4 SPEC Code 34
Table 3-9. Vision Processor D4 Storage and Operating Conditions 34
Table 3-10. Stereo Depth Module 35
Table 3-11. Stereo Depth Module SKU Properties 37
Table 3-12. Standard Left and Right Imager Properties – D410/D415 38
Table 3-13. Wide Left and Right Imager Properties – D430 38
Table 3-14. Wide Left and Right Imager Properties – D450 39
Table 3-15. Wide Left and Right Imager Properties – D401 39
Table 3-16. Standard (D41x) Infrared Projector Parameters 40
Table 3-17. Wide (D43x, D45x) Infrared Projector Parameters 40
Table 3-18. Color Sensor Properties – D415 41

Table 3-19. Color Sensor Properties – D450 42
Table 3-20. Color Sensor Properties – D401* 42
Table 3-21. Depth Module 50-pin Connector Plug Details 43
Table 3-22. Stereo Depth Module Product Labeling 43
Table 3-23. Stereo Depth Module Label Fields 43
Table 3-24. Intel® RealSense™ Depth Module D400 Series Product Identifier Code and Product Material Code 44
Table 3-25. Other Stereo Depth Module Components 44
Table 3-26. Intel® RealSense™ Depth Module D410 Mechanical Dimensions 45
Table 3-27. Intel® RealSense™ Depth Module D415 Mechanical Dimensions 45
Table 3-28. Intel® RealSense™ Depth Module D430 Mechanical Dimensions 45
Table 3-29. Intel® RealSense™ Depth Module D450 Mechanical Dimensions 46
Table 3-30. Intel® RealSense™ Depth Module D401 Mechanical Dimensions 46
Table 3-31. Stereo Depth Module Storage and Powered Conditions 46
Table 3-32. Vision Processor D4 Board 47
Table 3-33. Vision Processor D4 Board Components 47
Table 3-34. Vision Processor D4 USB Type-C V1/V3 Board Mechanical Dimensions 48
Table 3-35. Vision Processor D4 USB3 Micro-B V4 Board Mechanical Dimensions 49
Table 3-36. Depth Module Receptacle Details 49
Table 3-37. Interposer Interconnect Signal Description – D415, D435, D435i, D435f, D455 51
Table 3-38. Interposer Interconnect Signal Description - D401 55
Table 3-39. Custom Flex Interposer Ordering Logistics 57
Table 3-40. External Sensor Connector Details 58
Table 3-41. External Sensor Sync Connector Pin List 58
Table 3-42. USB Peripheral Connector Pin List 59
Table 3-43. USB Peripheral Connector Pin List – D405 60
Table 3-44. ISP Properties 61
Table 3-45. Vision Processor D4 Board Power Requirements 61
Table 3-46. Vision Processor D4 Board Storage and Powered Conditions 62
Table 3-47. Vision Processor D4 Board Product Identifier and Material Code 62
Table 3-48. Depth Camera SKU Properties 64
Table 3-49. D435 and D435f Comparison 65
Table 3-50. Intel® RealSense™ Depth Camera D415 Mechanical Dimensions 66
Table 3-51. Intel® RealSense™ Depth Camera D435, D435i, D435f Mechanical Dimensions 66
Table 3-52. Intel® RealSense™ Depth Camera D455 Mechanical Dimensions 66
Table 3-53. Intel® RealSense™ Depth Camera D405 Mechanical Dimensions 66
Table 3-54. Depth Camera D400 Series Storage and Powered Conditions 67
Table 3-55. Depth Camera D400 Series Product Identifier and Material Code 68
Table 4-1. Vendor ID and Device ID Table 70
Table 4-2. Image Formats (USB 3.1 Gen 1) – D410/D415/D430/D435/D435i/D435f 70
Table 4-3. Image Formats (USB 3.1 Gen 1) – D450/D455 72
Table 4-4. Image Formats (USB 3.1 Gen1) – D401/D405 73
Table 4-5. Simultaneous Image Streams (USB 3.1 Gen 1) – D410/D415/D430/D435/D435i/D435f/D450/D455 74
Table 4-6. Simultaneous Image Streams (USB 3.1 Gen 1) – D401/D405 74
Table 4-7. Image Formats (USB 2.0) – D410/D415/D430/D435/D435i/D435f 75
Table 4-8. Image Formats (USB 2.0) – D450/D455 75
Table 4-9. Image Formats (USB 2.0) – D405 76
Table 4-10. Simultaneous Image Streams (USB 2.0) 77
Table 4-11. Minimum-Z Depth 80
Table 4-12. Depth Quality Metric 80
Table 4-13. Depth Quality Metric Illustration 81
Table 4-14. Depth Quality Specification 81
Table 4-15. Depth Module Depth Start Point 83
Table 4-16. Depth Cameras Depth Start Point 85

Table 4-17. Depth Module X-Y Depth Origin Coordinates 85
Table 4-18. Depth Module X-Y Depth Origin Coordinates – D401 86
Table 4-19. Depth Camera X-Y Depth Origin Coordinates..... 87
Table 4-20. Depth Camera X-Y Depth Origin Coordinates – D405 88
Table 4-21. Depth Camera Controls 88
Table 4-22. RGB Exposed Controls..... 89
Table 4-23. IMU Specifications – BMI055..... 90
Table 4-24. IMU Specifications – BMI085..... 90
Table 7-1. Vision Processor D4 Board V1/V2/V3 – Component Power and TDP at Max Operating Mode(1)..... 98
Table 7-2. Vision Processor D4 Board V4 – Component Power and TDP at Max Operating Mode(1) .. 99
Table 7-3. Stereo Depth Module (D410/D415) – Component Power and TDP at Max Operating Mode(1)..... 99
Table 7-4. Stereo Depth Module (D430) – Component Power and TDP at Max Operating Mode(1) ... 99
Table 7-5. Stereo Depth Module (D450) – Component Power and TDP at Max Operating Mode(1) ... 99
Table 7-6. Stereo Depth Module (D401) – Component Power and TDP at Max Operating Mode(1) ..100
Table 7-7. Stereo Depth Camera (D415) – Component Power and TDP at Max Operating Mode(1) .100
Table 7-8. Stereo Depth Camera (D435) – Component Power and TDP at Max Operating Mode(1) .100
Table 7-9. Stereo Depth Camera (D455) – Component Power and TDP at Max Operating Mode(1) .101
Table 7-10. Stereo Depth Camera (D405) – Component Power and TDP at Max Operating Mode(1)101
Table 7-11. Vision Processor D4 Board Components – Case Temperature Limits (Still Air) 101
Table 7-12. Component Transmission.....108
Table 7-13. Electrostatic Discharge Caution 112
Table 8-1. Host Transmit – Vision Processor D4 Receive Routing Guidelines.....115
Table 8-2. Vision Processor D4 Transmit - Host Receive Routing Guidelines 115
Table 8-3. Vision Processor D4 Transmit – Host Receive Routing Guidelines.....116
Table 8-4. Stereo Depth Module Transmit - Vision Processor D4 Receive Routing Guidelines 117
Table 8-5. USB 3.1 Gen 1 Host to Vision Processor D4 Routing Guidelines 119
Table 9-1. U.S. FDA Accession Number.....123
Table 12-1. Vision Processor D4 on Motherboard Schematic Checklist 143
Table 12-2. Vision Processor D4 Decoupling and Filter Requirements 152
Table 13-1. Example: Cover Material Parameters.....153

Revision History

Revision Number	Description	Revision Date
001	Initial release	January 2018
002	Tracking Module 1 removal, NRTL certification, 7.2.2.1 Firmware Update	March 2018
003	•Added USB2.0 support •Removed VBUS0 from Table 3 6. Vision Processor D4 Power Requirements •Table 3 12. Standard Left and Right Imager Properties •Table 3 13. Wide Left and Right Imager Properties •Table 3 9. Vision Processor D4 Storage and Operating Conditions •Table 3 27 Stereo Depth Module Storage and Operating Conditions •Table 3 38. Vision Processor D4 Board Storage and Operating Conditions •Table 3 44. Depth Camera D400 Series Storage and Operating Conditions •Table 4 3. Image Formats (USB 2.0) •Table 4 5. Simultaneous Image Streams (USB3.1 Gen1, USB 2.0) • 4.7 Depth Origin Point (Ground Truth Zero) • 7.14 Multi-camera hardware sync for multi-camera configuration	July 2018
004	•Description and Features •Terminology •Table 2-2. Depth Camera Product SKU Descriptions •Table 3-11. Stereo Depth Module SKU Properties •Table 3-33. Custom Flex Interposer Ordering Logistics •Table 3-35. External Sensor Sync Connector Pin List •Table 3-42. Depth Camera SKU properties •Table 3-47. Depth Camera D400 Series Product Identifier and Material Code •Table 4-1. Vendor ID and Device ID Table •Table 4-2. Image Formats (USB 3.1 Gen1) •Table 4-3. Image Formats (USB 2.0) •Table 4-9. Depth Quality Specification •Section 4-12 IMU Specification	November 2018
005	•Table 3-11. Stereo Depth Module SKU Properties •Table 3-42. Depth Camera SKU Properties •Table 4-4. Simultaneous Image Streams (USB 3.1 Gen 1 & USB 2.0) •Table 4-18. IMU Specifications	January 2019

Revision Number	Description	Revision Date
006	•Table 3-28. Vision Processor D4 Board •Table 4-2. Image Formats (USB 3.1 Gen1) •Table 4-4. Simultaneous Image Streams (USB 3.1 Gen1 & USB 2.0) •Table 4-17. RGB Exposed Controls •Figure 10-7. Intel® RealSense™ Depth Camera D415 •Figure 10-8. Intel® RealSense™ Depth Camera D435/D435i •Figure 4-1. Depth Field of View to Depth Map illustration	June 2019
007	•Table 3-19. Stereo Depth Module Label Fields •Table 3 43. Intel® RealSense™ Depth Camera D415 Mechanical Dimensions •Table 3 44. Intel® RealSense™ Depth Camera D435, D435i Mechanical Dimensions •Table 4-9. Depth Quality Specification •Section 7.6. Stereo Depth Module Flex •Remove Table 7-11. Bracket Ordering Logistics	October 2019
008	•Support for Intel® RealSense™ Vision Processor D4 Board V2 (IMU version for MM#954010) •Table 2-1. Depth Module Product SKU Descriptions •Table 3-9. Vision Processor D4 Storage and Operating Conditions •Table 3-15. Wide Infrared Projector Parameters •Table 3-27. Stereo Depth Module Storage and Powered Conditions •Table 3-37. Recommended USB Type C cable Assemblies Ordering Logistics •Table 3-40. Vision Processor D4 Board Storage and Powered Conditions •Table 3-41. Vision Processor D4 Board Product Identifier and Material Code •Table 3-45. Depth Camera D400 Series Storage and Powered Conditions •Table 4-2. Image Formats (USB 3.1 Gen 1) •Table 4-15. RGB Exposed Controls •Table 4-16. IMU Specifications •Table 7-10. Vision Processor D4 Board Components – Case Temperature Limits (Still Air) •Table 13-1. Example: Cover Material Parameters •Section 1. Description and Features •Section 3.6.7. Temperature Sensor •Section 3.7.5. USB Peripheral Connector – Type-C •Section 3.8.2.2. Depth Camera D400 Series Thermal Solution Guidance •Remove Table 4-3. Image Formats (USB 2.0) •Remove Section 4.8. Measured Power	April 2020

Revision Number	Description	Revision Date
009	•Section 1. Description and Features •Section 3.8.4. Camera Lens Cleaning Procedure •Section 9. Regulatory Compliance •Table 2-2. Depth Camera Product SKU Descriptions •Table 3-42. Depth Camera SKU properties •Table 3-45. Intel® RealSense™ Depth Camera D455 Mechanical Dimensions •Table 3-47. Depth Camera D400 Series Product Identifier and Material Code •Table 4-3. Image Formats (USB 3.1 Gen1) – D455 •Table 4-1. Vendor ID and Device ID Table •Table 4-4. Simultaneous Image Streams (USB 3.1 Gen1 & USB2.0) •Table 4-5. Depth Field of View •Table 4-6. Minimum-Z Depth •Table 4-9. Depth Quality Specification •Table 4-13. Depth Camera X-Y Depth Origin Coordinates •Table 4-11. Depth Cameras Depth Start Point •Table 4-16. IMU Specifications •Figure 3-15. Intel® RealSense™ Depth Camera D455 •Figure 10-9. Intel® RealSense™ Depth Camera D455	June 2020
010	•Figure 3-6. Stereo Depth Module (Intel® RealSense™ Depth Module D450) •Table 3-11. Stereo Depth Module SKU Properties •Table 3-14. Wide Left and Right Imager Properties – D450 •Table 3-22. Intel® RealSense™ Depth Module D400 Series Product Identifier Code and Product Material Code •Table 3-29. Intel® RealSense™ Depth Module D450 Mechanical Dimensions •Table 3 43. Vision Processor D4 Board Product Identifier and Material Code •Table 3-48. Depth Camera D400 Series Storage and Powered Conditions – Notes •Table 3-49. Depth Camera D400 Series Product Identifier and Material Code •Table 4-1. Vendor ID and Device ID Table •Table 4-5. Depth Field of View •Table 4-9. Depth Quality Specification •Table 4-10. Depth Module Depth Start Point •Table 4-12. Depth Module X-Y Depth Origin Coordinates •Table 4-16. IMU Specifications •Table 7-10. Stereo Depth Module (D450) – Component Power and TDP at Max Operating Mode(1) •Figure 7-9. Bottom Stiffener Depth Module D450 •Figure 10-6. Intel® RealSense™ Depth Module D450	February 2021

Revision Number	Description	Revision Date
011	•General: typos, rephrasing, removing D420 •Table 2-2. Depth Camera Product SKU Descriptions •Table 3-10. Stereo Depth Module •Table 3-11. Stereo Depth Module SKU Properties •Table 3-15. Standard Infrared Projector Parameters •Table 3-16. Wide Infrared Projector Parameters •Table 3-18. Color Sensor Properties •Tables 3-24 to 3-29 3-45 to 3-47 flatness •Table 3-43. Depth Camera SKU properties •Table 3-48. Case temperature •4.11 IMU Specifications - removing Vision Processor D4 Board V2 (PCN #1180–5 - 00) •Table 4-2. Image Formats (USB 3.1 Gen1) •Table 4-3. Image Formats (USB 3.1 Gen1) – D450/D455 •Table 4-4. Simultaneous Image Streams (USB 3.1 Gen1 & USB2.0) •Table 4-8. Adding lifetime •Table 4-9. Depth Quality Specification •Table 7-4. Stereo depth module D450 component power •4.3 Depth Field of View (FOV) •7.4. Update thermal data and add cameras •7.6 Stereo Depth Module Mounting Guidance •9.1 Regulatory laser compliance •9.2 Regulatory compliance •Figure 10-6. Intel® RealSense™ Depth Module D450	August 2021
012	• General: Add D401/D405	March 2022
013	• General: Add D435f	April 2022

1 Description and Features

The Intel® RealSense™ Product Family D400 Series is a stereo vision depth camera system. The subsystem assembly contains a stereo depth module and vision processor with USB 2.0/USB 3.1 Gen 1 or MIPI[1] connection to host processor.

The small size and ease of integration of the camera subsystem provides system integrators flexibility to design into a wide range of products.

The Intel® RealSense™ D400 series also offers complete depth cameras integrating the vision processor, stereo depth module, RGB sensor with color image signal processing, and an Inertial Measurement Unit[2] (IMU). The depth cameras are designed for easy setup and portability making them ideal for makers, educators, hardware prototypes and software development.

The Intel® RealSense™ D400 series is supported with the cross-platform and open source Intel® RealSense™ SDK 2.0.

Usages/Markets	• Autonomous Mobile Robots (AMR) • Automated Guided Vehicles (AGV) • Drones • Collision avoidance • Home surveillance • 3D scanning • Digital signage • Volumetric measurement
Minimum System Requirements	• USB 2.0/USB 3.1 Gen 1 • Ubuntu*16.xx/Windows*10
General Features	• 2nd Generation Stereo Depth Camera System • 2nd Generation dedicated Intel® RealSense™ Vision Processor D4 with advanced algorithms • Infrared (IR) Laser Projector System • Full HD resolution Image sensors • Active power management • Selection of Stereo Depth Module options to meet your usage requirements 1. MIPI is not currently supported. Please contact your Intel representative on MIPI enablement timelines. 2. Module and Camera SKU dependent
Intel® RealSense™ Depth Camera D415 Features	• Intel® RealSense™ Vision Processor D4 • Up to 1280 x 720 stereo depth resolution • Up to 1920 x 1080 RGB resolution • Depth diagonal field of view over 70° • Dual rolling shutter sensors for up to 90 FPS depth streaming

	• Range 0.3 m to over 4 m (varies with lighting conditions)
Intel® RealSense™ Depth Camera D435/D435i Features	• Intel® RealSense™ Vision Processor D4 • Up to 1280 x 720 stereo depth resolution • Up to 1920 x 1080 RGB resolution • Depth diagonal field of view over 90° • Dual global shutter sensors for up to 90 FPS depth streaming • Range 0.2 m to over 3 m (varies with lighting conditions) • Intel® RealSense™ Depth Camera D435i includes Inertial Measurement Unit (IMU) for 6 Degrees of Freedom (6DoF) data
• Intel® RealSense™ Depth Camera D455 Features	• Intel® RealSense™ Vision Processor D4 • Up to 1280 x 720 stereo depth resolution • Up to 1280 x 800 RGB resolution • Diagonal field of view over 90° • Dual global shutter sensors for up to 90 FPS depth streaming • RGB global shutter sensor for up to 90 FPS • Range 0.4 m to over 6 m (varies with lighting conditions) • Intel® RealSense™ Depth Camera D455 includes Inertial Measurement Unit (IMU) for 6 Degrees of Freedom (6DoF) data
• Intel® RealSense™ Depth Camera D405 Features	• Intel® RealSense™ Vision Processor D4 • Up to 1280 x 720 stereo depth resolution • Up to 1280 x 720 RGB resolution • Diagonal field of view over 90° • Dual global shutter sensors for up to 90 FPS depth streaming • RGB global shutter sensor for up to 90 FPS • Range 7 cm to 1 m (varies with lighting conditions)

2 Introduction

2.1 Purpose and Scope of this Document

This document captures the specifications and the design–in details for the Intel® RealSense™ D400 series family of products. This document provides information necessary to understand and implement an Intel® RealSense™ D400 series-based camera system.

Note: Intel® RealSense™ D400 series is alternately referred to as "D4 Camera System" in this document. Intel® RealSense™ Vision Processor D4 is alternately referred to as "D4" in this document.

2.2 Terminology

Term	Description
6DOF	Six Degrees of Freedom (6DoF) refers to the freedom of movement of a rigid body in three-dimensional space. Forward/back, up/down, left/right, pitch, yaw, roll
Stereo Depth Baseline	The distance between the center of the left and right imagers in a stereo camera
MIPI CSI-2	The Camera Serial Interface (CSI) is a specification of the Mobile Industry Processor Interface (MIPI) Alliance and CSI-2 is the 2nd generation specification defining the interface between a camera and a host processor
Depth	Depth video streams are similar to color video streams except that each pixel has a value representing the distance away from the camera instead of color information
D4	If the term D4 is used alone, it refers to the entire D4 camera system consisting of various modules and components. If the term D4 is used with an appropriate qualifier (i.e., D4 Vision Processor, D4 Vision Processor Board), it refers to the specific module or component within the D4 camera system.
FOV	Field Of View (FOV) describes the angular extent of a given scene that is imaged by a camera. A camera's FOV can be measured horizontally, vertically, or diagonally.
Host System	Computer or SOC connected to D4 camera
I2C	I²C (Inter-Integrated Circuit), pronounced I-squared-C, is a multi-master, multi-slave, single-ended, serial computer bus invented by Philips Semiconductor (now NXP Semiconductors). It is typically used to allow easy control and data communication between components.

Term	Description
IR Projector	This refers to the source of infrared (IR) light used for illuminating a scene, object, or person to collect depth data.
Imagers	Depth camera system uses a pair of cameras referred as imagers to calculate depth. They are identical cameras configured with identical settings.
Image Signal Processor (ISP)	Image processing functions to enhance color image quality
Left imager	From the perspective of the stereo camera looking out at the world, the left imager is on the left side of the camera module. Thus, when the user is facing the front of the camera, the left imager is on the right side of the camera module.
Lens	This refers to the optical component of an imager in the D4 camera. Its purpose is to focus the incoming light rays onto the CMOS chip in the imager.
MIPI	MIPI (Mobile Industry Processor Interface) is a global, open membership organization that develops interface specifications for the mobile ecosystem
Platform camera	This refers to the two-dimensional (2D) color camera on a platform
System on Chip (SoC)	Integrated circuit (IC) that integrates all components of a computer
Stereo Depth Module	This refers to a stiffened module containing at least two imagers. The distance between the imagers, which is referred to as the baseline or intraocular spacing, is typically in the range of 18 mm to 95 mm.
Stereo camera	This refers to a pair of imagers looking at the same subject from slightly different perspectives. The difference in the perspectives is used to generate a depth map by calculating a numeric value for the distance from the imagers to every point in the scene.
SKU	Stock Keeping Unit (SKU) is a unique identifier for distinct products. It is often used in the scope of naming different versions of a device.
TBD	To Be Determined. In the context of this document, information will be available in a later revision.

2.3 Stereo Vision Depth Technology Overview

The Intel® RealSense™ D400 series depth camera uses stereo vision to calculate depth. The stereo vision implementation consists of a left imager, right imager, and an optional infrared projector. The infrared projector projects a non-visible static IR pattern to improve depth accuracy in scenes with low texture. The left and right imagers capture the scene and send imager data to the depth imaging (vision) processor, which calculates depth values for each pixel in the image by

correlating points on the left image to the right image and via the shift between a point on the Left image and the Right image. The depth pixel values are processed to generate a depth frame. Subsequent depth frames create a depth video stream.

Figure 2-1. Active Infrared (IR) Stereo Vision Technology

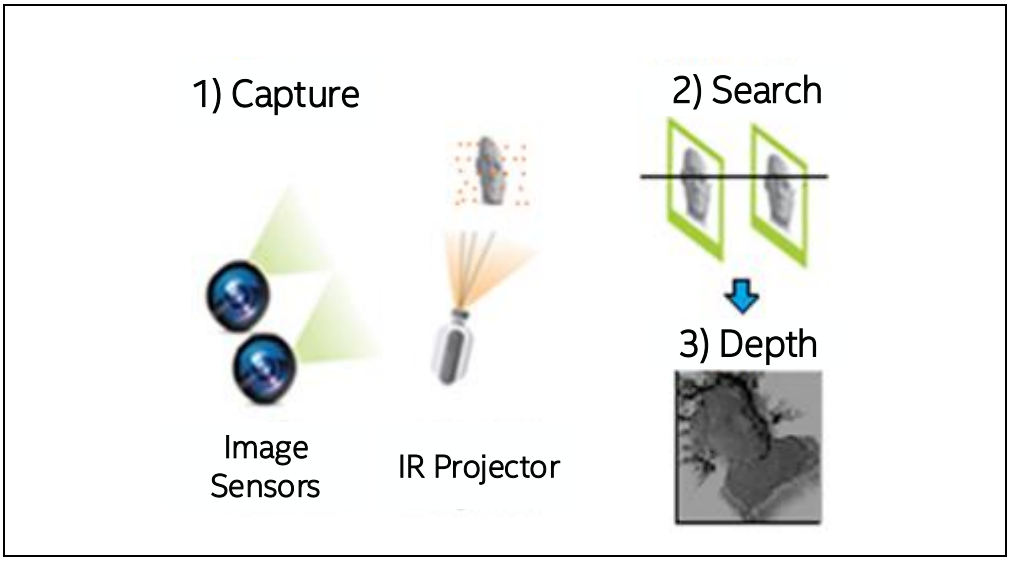

The depth pixel value is a measurement from the parallel plane of the imagers and not the absolute range as illustrated.

Figure 2-2. Depth Measurement (Z) versus Range (R)

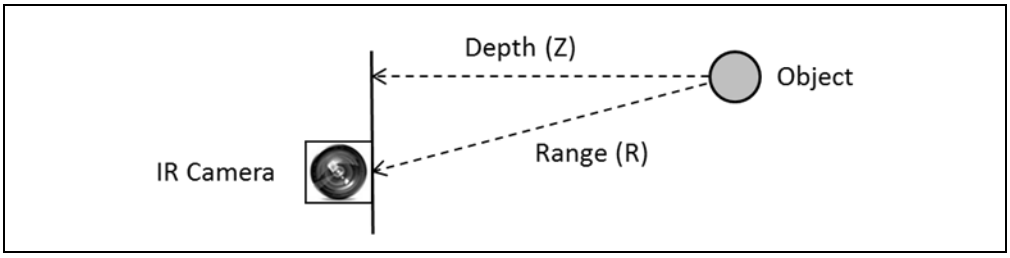

2.4 Camera System Block Diagram

The camera system has two main components, Vision Processor D4 and Depth module. The Vision Processor D4 is either on the host processor motherboard or on a discrete board with either a USB2.0/USB 3.1 Gen 1 or a MIPI connection to the host processor. The Depth module incorporates left and right imagers for stereo vision with the optional IR projector and RGB color sensor. The RGB color sensor data is sent to Vision Processor D4 via the color Image Signal Processor (ISP) on the Host Processor motherboard or D4 Board.

Figure 2-3. Vision Processor D4 Camera System Block Diagram

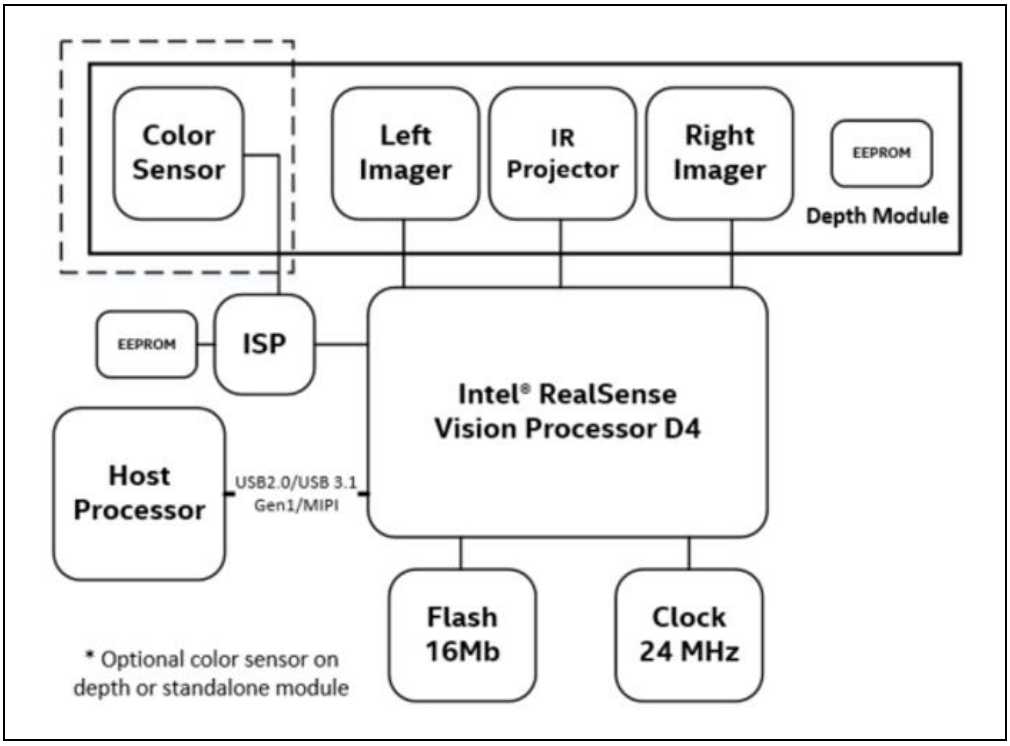

2.5 Intel® RealSense™ Depth Module D400 series Product SKUs

The Table below describes the main components that make up the different depth module SKUs.

Table 2-1. Depth Module Product SKU Descriptions

Component	Subcomponent	D410	D415	D430	D450	D401
Intel® RealSense™ Vision Processor D4	-	√	√	√	√	√
Intel® RealSense™ Vision Processor D4 Board	-	**V1**(1)	**V1**(1)	**V1**(1)**/V3**(2)	**V3**(2)	**V4**(3)
Intel® RealSense™ Depth Module	Standard Stereo Imagers	√	√	**X**	**X**	**X**
	Wide Stereo Imagers	**X**	**X**	√	√	√
	Standard Infrared Projector	√	√	**X**	**X**	**X**
	Wide Infrared Projector	**X**	**X**	√	√	**X**
	RGB Color Sensor	**X**	√	**X**	√	√(4)

Definitions:

D410 = Intel® RealSense™ Depth Module D410
D415 = Intel® RealSense™ Depth Module D415
D430 = Intel® RealSense™ Depth Module D430
D450 = Intel® RealSense™ Depth Module D450
D401 = Intel® RealSense™ Depth Module D401

Notes:

(1) Intel® RealSense™ Vision Processor D4 Board V1
(2) Intel® RealSense™ Vision Processor D4 Board V3 (IMU Version of V1)
(3) Intel® RealSense™ Vision Processor D4 Board V4
(4) Left depth sensor provides RGB data to color ISP

2.6 Intel® RealSense™ Depth Camera D400 series Product SKUs

The Table below describes the main components that make up the different camera SKUs.

Table 2-2. Depth Camera Product SKU Descriptions

Component	Sub component	Intel® RealSense ™ Depth Camera D415	Intel® RealSense ™ Depth Camera D435/ D435f	Intel® RealSense ™ Depth Camera D435i	Intel® RealSense ™ Depth Camera D455	Intel® RealSense ™ Depth Camera D405
Intel® RealSense™ Vision Processor D4	-	√	√	√	√	√
Intel® RealSense™ Depth Module	Standard Stereo Imagers	√	x	x	x	x
	Wide Stereo Imagers	x	√	√	√	√
	Standard Infrared Projector	√	x	x	x	x
	Wide Infrared Projector	x	√	√	√	x
	RGB color sensor	√	√	√	√	√
Inertial Measurement Unit (IMU)		x	x	√	√	x

Notes:

1. For information regarding USB interoperability, refer to whitepaper "USB Interoperability Testing for Intel® RealSense™ Cameras" - https://www.intelrealsense.com/usb-interoperability-testing-for-intel-realsense-cameras

2. D435f = D435 with 750nm near-infrared filter (CLAREX® NIR-75N) applied to cover glass, with holes over projector and RGB sensor openings. Filter transmits near-infrared light and absorbs visible light. Filter's thickness = 0.5 mm.

3 Component Specification

3.1 Vision Processor D4 Camera System Components

Table 3-1. Component Descriptions

Component	Description
Host Processor	Host Processor that receives Depth and other data streams from Vision Processor D4
Vision Processor D4	Depth Imaging Processor with USB 2.0/USB 3.1 Gen 1 or MIPI interface connection to Host Processor
Clock	24 MHz clock source for Vision Processor D4
Serial Flash Memory	SPI 16 Mb Serial Flash memory for firmware storage
Stereo Depth Module	Camera module with left and right imager, color sensor†, IR projector† enclosed in a stiffener
Power Delivery	Circuitry on motherboard/Vision Processor D4 Board to deliver and manage power to Vision Processor D4 and Stereo Depth Module.
Stereo Depth Connector and Interposer	50-pin connector on motherboard/Vision Processor D4 Board and Stereo Depth module with interposer for connection

Note:
(†) SKU dependent

3.2 Host Processor

The host processor interface to Vision Processor D4 is either USB 2.0/USB 3.1 Gen 1 or MIPI. To ensure the best of quality of service, the Vision Processor D4 must be connected to a dedicated USB 3.1 Gen 1 root port within the host processor system.

3.3 Intel® RealSense™ Vision Processor D4

The primary function of Vision Processor D4 is to perform depth stereo vision processing. The Vision Processor D4 on the Host Processor motherboard or on the Vision Processor D4 Board communicates to the host processor through USB2.0/USB 3.1 Gen 1 or MIPI and receives sensor data from the stereo depth module. The Vision Processor D4 supports MIPI CSI-2 channels for the connection to the image sensors.

3.3.1 Vision Processor D4 Features

- 28 nm CMOS process technology
- 5 MIPI camera ports with each MIPI lane capable of handling data transfers of up to 750 Mbps
- USB 2.0/USB 3.1 Gen 1 or MIPI interface to host system
- Image rectification for camera optics and alignment compensation
- IR Projector (laser) controls
- Serial Peripheral Interface for fast data transfer with external SPI flash
- Integrated I2C ports
- General purpose Input/Output pins
- Active power gating

3.3.2 Vision Processor D4 Signal Description

Table 3-2. Vision Processor D4 Signal Descriptions

RESERVED – Signal reserved for future usage

IO Type- Input/Output Buffer type

A – Analog

I – Input

O - Output

Signal Name	Description	IO Type	After RESET
Host MIPI			
H_DATAP0 H_DATAN0	Host MIPI Data Lane 0 Differential Pair	A	I
H_DATAP1 H_DATAN1	Host MIPI Data Lane 1 Differential Pair	A	I
H_DATAP2 H_DATAN2	Host MIPI Data Lane 2 Differential Pair	A	I
H_DATAP3 H_DATAN3	Host MIPI Data Lane 3 Differential Pair	A	I
H_CLKP H_CLKN	Host MIPI Clock Differential Transmit Pair	A	I
H_SDA H_SCL	Host I^2C Bus Data and Clock	I/O	IO
H_REXT	Host MIPI External Reference 6.04K 1% resistor pull down to ground)	A	I
Imager A MIPI			
A_DATAP0	Imager A MIPI Data Lane 0 Differential Receive Pair	A	I

Signal Name	Description	IO Type	After RESET
A_DATAN0			
A_DATAP1 A_DATAN1	Imager A MIPI Data Lane 1 Differential Receive Pair	A	I
A_CLKP A_CKLN	Imager A MIPI Clock Differential Receive Pair	A	I
A_SDA A_SCL	Imager A I^2C Bus Data and Clock	I/O	IO
A_RCLK	Imager A Reference Clock	I/O	O
A_PDOWN	(RESERVED) Imager A Power Down Signal	I/O	O
A_VSYNC	Imager A Vertical/Frame Sync	I/O	I
A_RESETN	Imager A Reset	I/O	O
A_REXT	Imager A MIPI External Reference (6.04K 1% resistor pull down to ground)	A	I
Imager B MIPI			
B_DATAP0 B_DATAN0	(RESERVED) Imager B MIPI Data Lane 0 Differential Receive Pair	A	I
B_DATAP1 B_DATAN1	(RESERVED) Imager B MIPI Data Lane 1 Differential Receive Pair	A	I
B_CLKP B_CKLN	(RESERVED) Imager B MIPI Clock Differential Receive Pair	A	I
B_SDA B_SCL	(RESERVED) Imager B I^2C Bus Data and Clock	I/O	IO
B_RCLK	(RESERVED) Imager B Reference Clock	I/O	O
B_PDOWN	(RESERVED) Imager B Power Down	I/O	O
B_VSYNC	(RESERVED) Imager B Vertical/Frame Sync	I/O	I
B_RESETN	(RESERVED) Imager B Reset	I/O	O
B_REXT	Imager B MIPI External Reference (6.04K 1% resistor pull down to ground)	A	I
Imager M MIPI			
M_DATAP0 M_DATAN0	Imager M MIPI Data Lane 0 Differential Receive Pair	A	I
M_DATAP1 M_DATAN1	Imager M MIPI Data Lane 1 Differential Receive Pair	A	I
M_CLKP M_CKLN	Imager M MIPI Clock Differential Receive Pair	A	I
M_SDA M_SCL	Imager M I^2C Bus Data and Clock	I/O	IO

Signal Name	Description	IO Type	After RESET
M_RCLK	Imager M Reference Clock	I/O	O
M_PDOWN	(RESERVED) Imager M Power Down	I/O	O
M_VSYNC	Imager M Vertical/Frame Sync	I/O	I
M_RESETN	Imager M Reset	I/O	O
M_REXT	Imager M MIPI External Reference (6.04K 1% resistor pull down to ground)	A	I
Imager Y MIPI			
Y_DATAP0 Y_DATAN0	Imager Y MIPI Data Lane 0 Differential Receive Pair	A	I
Y_DATAP1 Y_DATAN1	Imager Y MIPI Data Lane 1 Differential Receive Pair	A	I
Y_CLKP Y_CKLN	Imager Y MIPI Clock Differential Receive Pair	A	I
Y_SDA Y_SCL	Imager Y I^2C Bus Data and Clock	I/O	IO
Y_RCLK	Imager Y Reference Clock	I/O	O
Y_PDOWN	(RESERVED) Imager Y Power Down	I/O	O
Y_VSYNC	Imager Y Vertical/Frame Sync	I/O	I
Y_RESETN	Imager Y Reset	I/O	O
Y_REXT	Imager Y MIPI External Reference (6.04K 1% resistor pull down to ground)	A	I
Imager Z MIPI			
Z_DATAP0 Z_DATAN0	(RESERVED) Imager Z MIPI Data Lane 0 Differential Receive Pair	A	I
Z_DATAP1 Z_DATAN1	(RESERVED) Imager Z MIPI Data Lane 1 Differential Receive Pair	A	I
Z_CLKP Z_CKLN	(RESERVED) Imager Z MIPI Clock differential Receive Pair	A	I
Z_SDA Z_SCL	(RESERVED) Imager Z I^2C Bus Data and Clock	I/O	IO
Z_RCLK	(RESERVED) Imager Z Reference Clock	I/O	O
Z_PDOWN	(RESERVED) Imager Z Power Down	I/O	O
Z_VSYNC	Depth Vertical/Frame Sync	I/O	O
Z_RESETN	(RESERVED) Imager Z Reset	I/O	O
Z_REXT	Imager Z MIPI External Reference (6.04K 1% resistor pull down to ground)	A	I
Serial Peripheral Interconnect (SPI)			

Signal Name	Description	IO Type	After RESET
SPI_DI	SPI Data Input	I/O	I
SPI_DO	SPI Data Output	I/O	O
SPI_CLK	SPI Clock	O	O
SPI_CS	SPI Chip Select	O	O
SPI_WP	Flash Write Protect	O	O
General Purpose Input Output (GPIO)			
GPIO[0]	(RESERVED) Not Defined	I/O	I
GPIO[1]	(RESERVED) Not Defined	I/O	I
GPIO[2]	Laser PWM – Controls Laser Power for IR projector on Stereo Module	I/O	O
GPIO[3]	(RESERVED) Not Defined	I/O	I
GPIO[4]	(RESERVED) Not Defined	I/O	I
GPIO[5]	(RESERVED) Not Defined	I/O	I
GPIO[6]	(RESERVED) Not Defined	I/O	I
GPIO[7]	(RESERVED) Not Defined	I/O	I/O
EGPIO[0]	(RESERVED) Not Defined	I/O	I/O
EGPIO[1]	(RESERVED) Not Defined	I/O	I/O
EGPIO[2]	(RESERVED) Not Defined	I/O	I/O
EGPIO[3]	Laser_PWRDN - IR projector Power Down Signal	I/O	O
EGPIO[4]	(RESERVED) Not Defined	I/O	I/O
EGPIO[5]	FLAGB – IR Projector Fault Detect	I/O	I
EGPIO[6]	(RESERVED) Not Defined	I/O	I/O
EGPIO[7]	(RESERVED) Not Defined	I/O	I/O
EGPIO[8]	ISP_FCS (Color ISP)	I/O	O
EGPIO[9]	(RESERVED) Not Defined	I/O	I/O
EGPIO[10]	(RESERVED) Not Defined	I/O	I/O
EGPIO[11]	(RESERVED) Not Defined	I/O	I/O
EGPIO[12]	(RESERVED) Not Defined	I/O	I/O
EGPIO[13]	(RESERVED) - For Intel test purpose only	I/O	I/O
Miscellaneous			
LD_ON_OUT_XX	(RESERVED) Laser Enable	O	O
MODSTROB	(RESERVED) Modulation current strobe	O	O
MODSIGN	(RESERVED) Modulation current sign	O	O
LD_ERR	Laser Error (Active High)	I	I
CLKXI	24 MHz XTAL	I	I

Signal Name	Description	IO Type	After RESET
CLKXO	24MHz XTAL	I	I
PRSTN	D4 Reset	I	I
CW_CSR_PRSTn	Hardware reset without debug port reset	I/O	I
PMU_PWR_EN	Switchable domain (VDD_PG) power control signal	I/O	O
DFU	Dynamic FW update, used for FW recovery	I/O	I
ISP_SCL ISP_SDA	I^2C Bus Data and Clock	I/O	IO
VQPSQ	(RESERVED) – For Intel test purpose only	O	O
VQPSM	(RESERVED) – For Intel test purpose only	O	O
REFPADCLKP	(RESERVED) – For Intel test purpose only	I	I
REFPADCLKM	(RESERVED) – For Intel test purpose only	I	I
JTAG			
TDI	Test Data Input	I/O	I
TDO	Test Data Output	I/O	O
TCLK	Test Clock Input	I/O	I
TMS	Test Mode Select	I/O	I
TRSTN	Test Reset	I/O	I
USB			
USB_RXP	USB 3.1 Gen 1 receive, positive side	A	I
USB_RXN	USB 3.1 Gen 1 receive, negative side	A	I
USB_TXP	USB 3.1 Gen 1 Transmit, positive side	A	O
USB_TXN	USB 3.1 Gen 1 Transmit, negative side	A	O
USB_DP	USB 2.0 D+ line	A	IO
USB_DN	USB 2.0 D- line	A	IO
USB_ID	Mini-receptacle identifier and test point		
USB_RESREF	Reference Resistor input. 200 Ohm 1%	A	I
Power and Ground			
VDD	0.9 V (Core Voltage)	Power	
VDD_PG	0.9 V (Switched Core Voltage)	Power	
USB_DVDD	0.9 V (USB Core Voltage)	Power	
VPTX0	0.9 V (USB Core Voltage)	Power	
VP	0.9 V (USB Core Voltage)	Power	
*_AVDD	1.8 V (MIPI Core and IO Voltage)	Power	
VDDPLL	0.9 V (PLL Voltage)	Power	

Signal Name	Description	IO Type	After RESET
VDDTS	1.8 V (Temperature Sensor Voltage)	Power	
VDDPST18	1.8 V (IO Voltage)	Power	
USB_VDD330	3.3 V (USB Core Voltage)	Power	
VBUS0	3.3 V (VBUS power monitor)	Power	
VSS	Ground	GND	
*_AGND	Ground	GND	

Table 3-3. Hardware Straps

Pin	Boot Load	HW/FW	Description
EPGPIO0	No	FW	USB connection type: 0: Peripheral (default) 1: Integrated
EGPIO4	Yes	HW	SPI Interface: 0: SPI on "Z" 1: SPI connected (default)
EPGPIO7 EPGPIO8	Yes	FW	Flash 00: 64 Mb 01: 8 Mb 10: 16 Mb (default) 11: 32 Mb
EPGPIO9	No	FW	Host interface: 0: USB (default) 1: MIPI
EPGPIO10	No	FW	Board version [0] (default: 0)
EPGPIO11	No	FW	Board version [1] (default: 0)
EPGPIO12	No	FW	Board version [2] (default: 0)
DFU	Yes	HW	Go to DFU 0: Disabled (default) 1: Go to DFU mode (Recovery)

Notes:

1. Boot Load – Read during Boot
2. Hardware (HW) Strap – External hardware pin state directly configures D4 functionality
3. Firmware (FW) Strap – External hardware pin state is read by firmware and firmware configures D4 functionality

3.3.3 Vision Processor D4 Package Mechanical Attributes

The Table below provides an overview of the mechanical attributes of the package.

Table 3-4. Vision Processor D4 Package Mechanical Attributes

Parameter	Description	Value
Package Technology	Package Type	Flip Chip CSP (Chip Scale Package)
	Interconnect	Ball Grid Array (BGA) Ball
	Lead Free	Yes
	Halogenated Flame Retardant Free	Yes
Package Configuration	Solder Ball Composition	SAC125Ni
	Ball/Pin Count	225 solder balls
	Grid Array Pattern	15 x 15
Package Dimensions	Nominal Package Size (mm)	6.40 x 6.40
	Min Ball/Pin pitch (mm)	0.42
Weight		~1 g

Figure 3-1. Vision Processor D4 Package Drawing

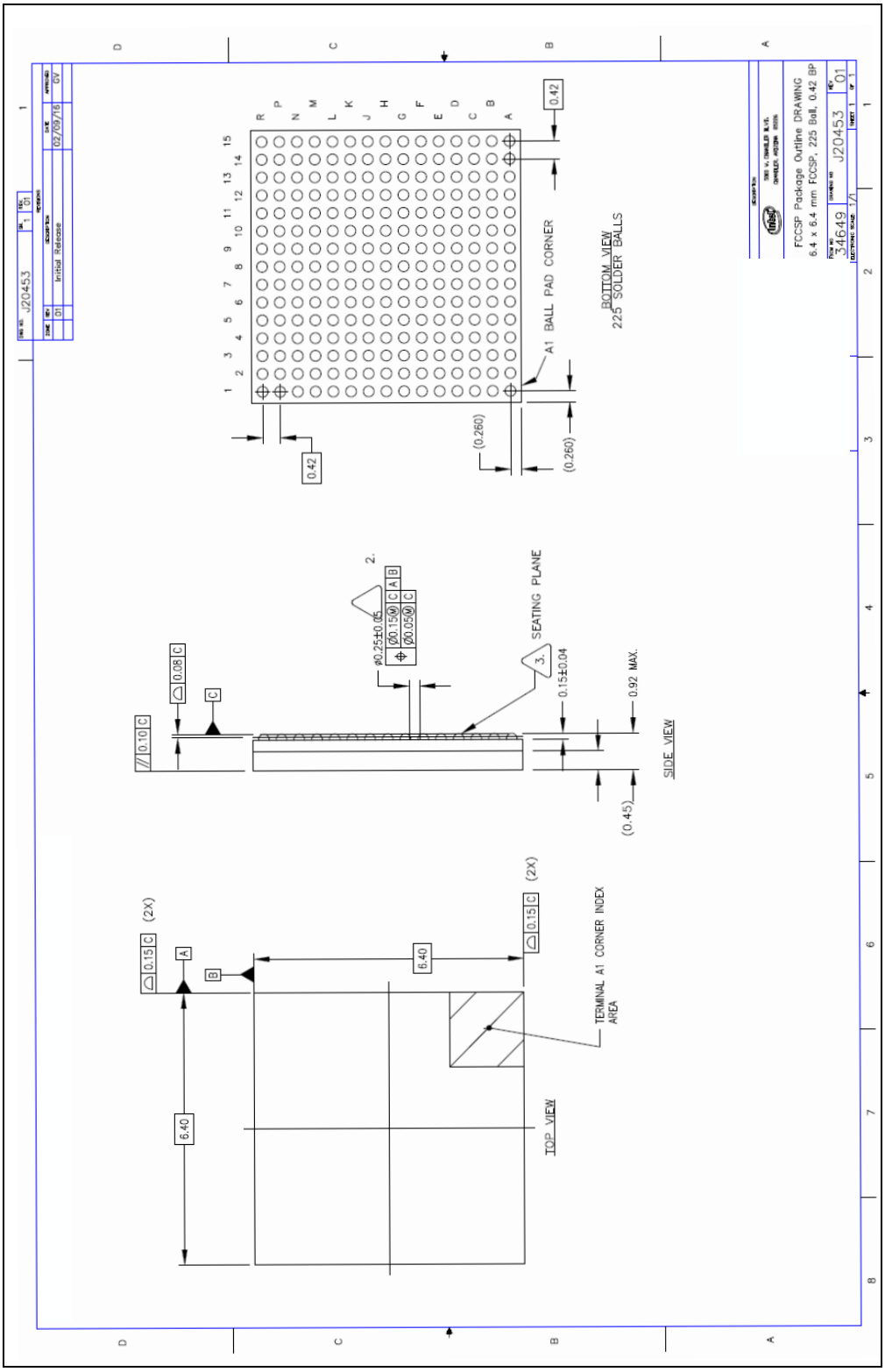

Figure 3-2. Vision Processor D4 Ball-out

	A	B	C	D	E	F	G	H	J	K	L	M	N	P	R	
15	VSS	Y_DATAN0	Y_REXT	Y_SCL	GPIO_0	GPIO_1	GPIO_5	GPIO_6	MODSTROB	TMS	TRSTN	SPI_WPN	SPI_MISO	CW_CSR_RSTN	VSS	15
14	Y_CLKN	Y_CLKP	Y_DATAP0	Y_RCLK	Y_SDA	Y_RESETN	GPIO_2	GPIO_3	MODSIGN	TCLK	TDO	SPI_CLK	SPI_MOSI	Z_RESETN	Z_VSYNC	14
13	Y_DATAN1	Y_DATAP1	VSS	VSS	Y_PDOWN	Y_VSYNC	GPIO_4	GPIO_7	LD_ERR	LD_ON_OUT_XX	TDI	SPI_CS	Z_SDA	Z_DATAP0	Z_RCLK	13
12	B_DATAN0	B_SCL	B_SDA	Y_AVDD	VSS	VSS	VDDPST18_LEFT	VSS	VSS	VDDPST18_LEFT	VSS	VSS	Z_SCL	Z_CLKP	Z_DATAN0	12
11	B_CLKN	B_DATAP0	B_REXT	VSS	VSS	VSS	VDD	VDD	VDD	VSS	VSS	Z_AVDD	Z_PDOWN	Z_DATAP1	Z_CLKN	11
10	B_DATAN1	B_CLKP	B_RESETN	B_AVDD	VDD_PG	VDD_PG	VDD_PG	VDD	VDD	VDD_PG	VDD_PG	ISP_SCL	Z_REXT	M_DATAP1	Z_DATAN1	10
9	H_DATAN3	B_DATAP1	B_PDOWN	VSS	VDD_PG	VDD_PG	VDD_PG	VSS	VSS	VDD_PG	VDD_PG	VSS	ISP_SDA	M_CLKP	M_DATAN1	9
8	H_DATAN2	H_DATAP3	B_VSYNC	VSS	VSS	VDD_PG	VDD_PG	VSS	VSS	VSS	VSS	VSS	VSS	M_DATAP0	M_CLKN	8
7	H_CLKN	H_DATAP2	B_RCLK	H_AVDD	VSS	VSS	VSS	VSS	VSS	VDD_PG	VDD_PG	M_AVDD	M_RESETN	M_PDOWN	M_DATAN0	7
6	H_DATAN1	H_CLKP	H_AVDD	REFPADCLKP	REFPADCLKM	VSS	VDD	VDD	VSS	VDD_PG	VDD_PG	M_REXT	M_VSYNC	M_SDA	M_RCLK	6
5	H_DATAN0	H_DATAP1	H_REXT	VP	USB_ID	VDD	VDD	VDD	VSS	VSS	VSS	VSS	VSS	A_DATAP1	M_SCL	5
4	H_SCL	H_DATAP0	USB_VDD330	VPTX0	USB_RESREF	USB_DVDD	VSS	VSS	VDDPST18_RIGHT	VSS	VSS	A_AVDD	A_REXT	A_CLKP	A_DATAN1	4
3	USB_RXN	H_SDA	PRSTN	USB_DP	EGPIO_1	EGPIO_11	VDDTS	VSSTS	VDDPST18_RIGHT	PMU_PWR_EN	VQPSQ	VQPSM	A_PDOWN	A_DATAP0	A_CLKN	3
2	USB_TXN	USB_RXP	DFU	USB_DN	EGPIO_9	EGPIO_13	VDDPLL	VSSPLL	EGPIO_5	EGPIO_12	EGPIO_3	EGPIO_4	A_SCL	A_RCLK	A_DATAN0	2
1	VSS	USB_TXP	VBUS0	EGPIO_6	EGPIO_7	EGPIO_8	CLK_XIN	CLK_XOUT	EGPIO_10	EGPIO_2	EGPIO_0	A_VSYNC	A_SDA	A_RESETN	VSS	1
	A	B	C	D	E	F	G	H	J	K	L	M	N	P	R	

Table 3-5. Vision Processor D4 Ball-out by Signal Name

Ball	Name	Ball	Name	Ball	Name
A01	H_AGND	B01	USB_TXP	C01	VBUS0
A02	USB_TXN	B02	USB_RXP	C02	DFU
A03	USB_RXN	B03	H_SDA	C03	PRSTN
A04	H_SCL	B04	H_DATAP0	C04	USB_VDD330
A05	H_DATAN0	B05	H_DATAP1	C05	H_REXT
A06	H_DATAN1	B06	H_CLKP	C06	H_AVDD
A07	H_CLKN	B07	H_DATAP2	C07	B_RCLK

Ball	Name	Ball	Name	Ball	Name
A08	H_DATAN2	B08	H_DATAP3	C08	B_VSYNC
A09	H_DATAN3	B09	B_DATAP1	C09	B_PDOWN
A10	B_DATAN1	B10	B_CLKP	C10	B_RESETN
A11	B_CLKN	B11	B_DATAP0	C11	B_REXT
A12	B_DATAN0	B12	B_SCL	C12	B_SDA
A13	Y_DATAN1	B13	Y_DATAP1	C13	Y_AGND
A14	Y_CLKN	B14	Y_CLKP	C14	Y_DATAP0
A15	Y_AGND	B15	Y_DATAN0	C15	Y_REXT
D01	EGPIO_6	E01	EGPIO_7	F01	EGPIO_8
D02	USB_DN	E02	EGPIO_9	F02	EGPIO_13
D03	USB_DP	E03	EGPIO_1	F03	EGPIO_11
D04	VPTX0	E04	USB_RESREF	F04	USB_DVDD
D05	VP	E05	USB_ID	F05	VDD
D06	REFPADCLKP	E06	REFPADCLKM	F06	VSS
D07	H_AVDD	E07	H_AGND	F07	VSS
D08	B_AGND	E08	VSS	F08	VDD_PG
D09	B_AGND	E09	VDD_PG	F09	VDD_PG
D10	B_AVDD	E10	VDD_PG	F10	VDD_PG
D11	VSS	E11	VSS	F11	VSS
D12	Y_AVDD	E12	VSS	F12	VSS
D13	VSS	E13	Y_PDOWN	F13	Y_VSYNC
D14	Y_RCLK	E14	Y_SDA	F14	Y_RESETN
D15	Y_SCL	E15	GPIO_0	F15	GPIO_1
G01	CLK_XIN	H01	CLK_XOUT	J01	EGPIO_10
G02	VDDPLL	H02	VSSPLL	J02	EGPIO_5
G03	VDDTS	H03	VSSTS	J03	VDDPST18_RIGHT
G04	VSS	H04	VSS	J04	VDDPST18_RIGHT
G05	VDD	H05	VDD	J05	VSS
G06	VDD	H06	VDD	J06	VSS
G07	VSS	H07	VSS	J07	VSS
G08	VDD_PG	H08	VSS	J08	VSS
G09	VDD_PG	H09	VSS	J09	VSS
G10	VDD_PG	H10	VDD	J10	VDD
G11	VDD	H11	VDD	J11	VDD
G12	VDDPST18_LEFT	H12	VSS	J12	VSS

Ball	Name	Ball	Name	Ball	Name
G13	GPIO_4	H13	GPIO_7	J13	LD_ERR
G14	GPIO_2	H14	GPIO_3	J14	MODSIGN
G15	GPIO_5	H15	GPIO_6	J15	MODSTROB
K01	EGPIO_2	L01	EGPIO_0	M01	A_VSYNC
K02	EGPIO_12	L02	EGPIO_3	M02	EGPIO_4
K03	PMU_PWR_EN	L03	VQPSQ	M03	VQPSM
K04	VSS	L04	VSS	M04	A_AVDD
K05	VSS	L05	VSS	M05	VSS
K06	VDD_PG	L06	VDD_PG	M06	M_REXT
K07	VDD_PG	L07	VDD_PG	M07	M_AVDD
K08	VSS	L08	VSS	M08	M_AGND
K09	VDD_PG	L09	VDD_PG	M09	M_AGND
K10	VDD_PG	L10	VDD_PG	M10	ISP_SCL
K11	VSS	L11	VSS	M11	Z_AVDD
K12	VDDPST18_LEFT	L12	VSS	M12	VSS
K13	LD_ON_OUT_XX	L13	TDI	M13	SPI_CS
K14	TCLK	L14	TDO	M14	SPI_CLK
K15	TMS	L15	TRSTN	M15	SPI_WPN
N01	A_SDA	P01	A_RESETN	R01	A_AGND
N02	A_SCL	P02	A_RCLK	R02	A_DATAN0
N03	A_PDOWN	P03	A_DATAP0	R03	A_CLKN
N04	A_REXT	P04	A_CLKP	R04	A_DATAN1
N05	A_AGND	P05	A_DATAP1	R05	M_SCL
N06	M_VSYNC	P06	M_SDA	R06	M_RCLK
N07	M_RESETN	P07	M_PDOWN	R07	M_DATAN0
N08	VSS	P08	M_DATAP0	R08	M_CLKN
N09	ISP_SDA	P09	M_CLKP	R09	M_DATAN1
N10	Z_REXT	P10	M_DATAP1	R10	Z_DATAN1
N11	Z_PDOWN	P11	Z_DATAP1	R11	Z_CLKN
N12	Z_SCL	P12	Z_CLKP	R12	Z_DATAN0
N13	Z_SDA	P13	Z_DATAP0	R13	Z_RCLK
N14	SPI_MOSI	P14	Z_RESETN	R14	Z_VSYNC
N15	SPI_MISO	P15	CW_CSR_RSTN	R15	Z_AGND

3.3.4 Vision Processor D4 Power Requirements

The Vision Processor D4 requires the following power supplies for operation.

Table 3-6. Vision Processor D4 Power Requirements

Voltage Ball Name	Min. (V)	Nominal (V)	Max. (V)	Peak Current (Icc)
VDD	0.85	0.9	0.95	0.4 A
VDD_PG	0.85	0.9	0.95	1.6 A
USB_DVDD	0.81	0.9	0.99	0.2 A
VPTX0	0.81	0.9	0.99	0.2 A
VP	0.81	0.9	0.99	0.2 A
*AVDD	1.71	1.8	1.89	0.2 A
VDDPLL	0.85	0.9	0.95	0.2 A
VDDTS	1.71	1.8	1.89	0.2 A
VDDPST18 (Left and Right)	1.71	1.8	1.89	0.2 A
USB_VDD330	3.13	3.3	3.46	0.2 A

3.3.5 Vision Processor D4 Power Sequencing

The timing requirement for power sequencing is listed below and shown in the following figure.

1. Hold Vision Processor D4 in reset
2. Ramp up power in the 3.3 V rail
3. Ramp up power in the 0.9 V rail
4. Ramp up power in the 1.8 V rail
5. Release Vision Processor D4 Reset

Table 3-7. Vision Processor D4 Power Sequencing Timing Parameters

Parameter	Value	Units	Label
0.9 V stable to 3.3 V stable	>= 50	us	T1
PMU_PWR_EN to 0.9 V Stable	>= 50	us	T2
1.8 V stable to 0.9 V Stable	>= 50	us	T3
PRSTN (D4 RESET) assertion to 1.8 V stable	15	us	T4

Figure 3-3. Vision Processor D4 Power Sequencing

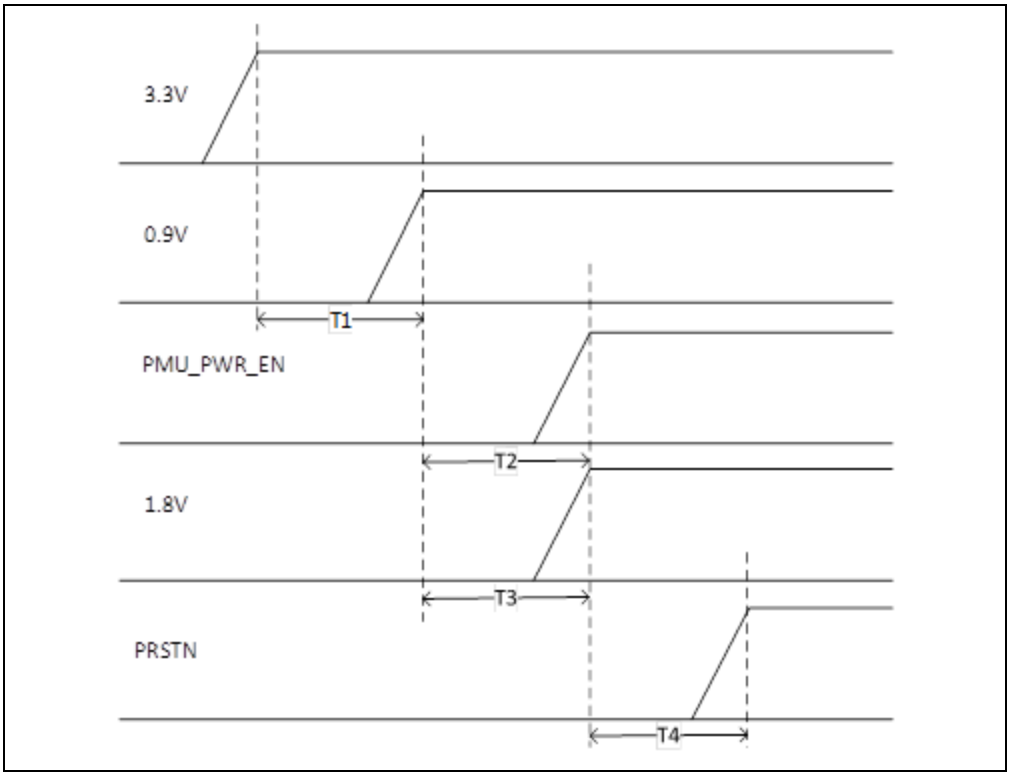

Note: Vision Processor D4 has no specific power down sequence requirement.

3.3.6 Vision Processor D4 Spec Code

The spec code is an identification mark printed on Vision Processor D4.

Table 3-8. Vision Processor D4 SPEC Code

Vision Processor D4	SPEC CODE
Production (Shipped in Tape and Reel)	SLLY5
Production (Shipped in Tray)	SLM6B

3.3.7 Vision Processor D4 Storage and Operating Conditions

Table 3-9. Vision Processor D4 Storage and Operating Conditions

Condition	Description	Min	Max	Unit
Storage (Still Air), Not Operating	Temperature (Sustained, Controlled)(1)	0	85	°C

	Temperature (Short Exposure)[2]	-40	85	°C
	Humidity	Temperature/ RH: 40°C / 90%		
Operating, Component Case Temperature[3]	Temperature	0	85	°C

Notes:

1. Controlled conditions should be used for long-term storage of product
2. Short exposure represents temporary max limits acceptable for transportation conditions
3. Component case temperature limits must be met during operation

3.3.8 Vision Processor D4 Thermals

The thermal design should be such that Vision Processor D4 does not exceed component case temperature limit. Care must also be taken to make sure that the Vision Processor D4 heat is not transferred to other components of the imaging system or stereo depth module. It is best to thermally isolate Vision Processor D4 from the stereo depth module.

3.4 Clock

Vision Processor D4 requires a single 24 MHz clock oscillator. All clocks required by stereo depth module are generated by Vision Processor D4.

3.5 Serial (SPI) Flash Memory

Vision Processor D4 requires 16 Mb Serial Flash Memory for its firmware storage. The recommended part number is IS25WP016 (www.issi.com) or equivalent.

3.6 Stereo Depth Module

The stereo depth module components are described in Table 3-10. The stereo depth printed circuit board and components are encapsulated in a common metal stiffener.

Table 3-10. Stereo Depth Module

Component	Description
Left and Right Imagers	2 image sensors
Infrared (IR) Projector[1]	Class 1 laser compliant (optional)
Color Sensor	RGB image sensor (optional)
Depth Module Connector	50-pin connector plug

Stiffener	Reinforcement housing to keep imagers aligned
Label	Manufacture and product identifier information
Other Components	Laser driver, EEPROM, voltage regulators, etc.

Note:

(1) IR projector is considered Class 1 when integrated into Intel® RealSense™ Depth Cameras. Also considered Class 1 when depth module is paired with Intel® RealSense™ Vision Processor D4 Board and integration guidelines in this datasheet are used.

Figure 3-4. Stereo Depth Module (Intel® RealSense™ Depth Module D410)

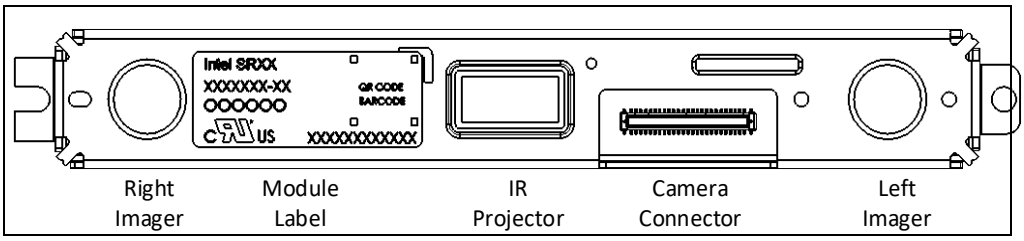

Figure 3-5. Stereo Depth Module (Intel® RealSense™ Depth Module D430)

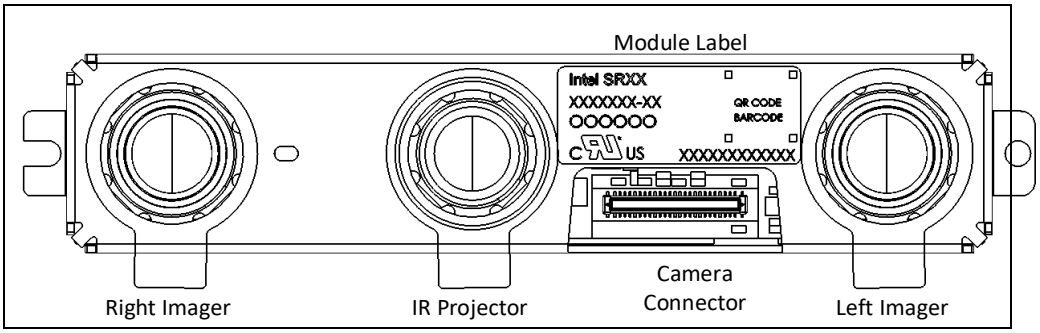

Figure 3-6. Stereo Depth Module (Intel® RealSense™ Depth Module D450)

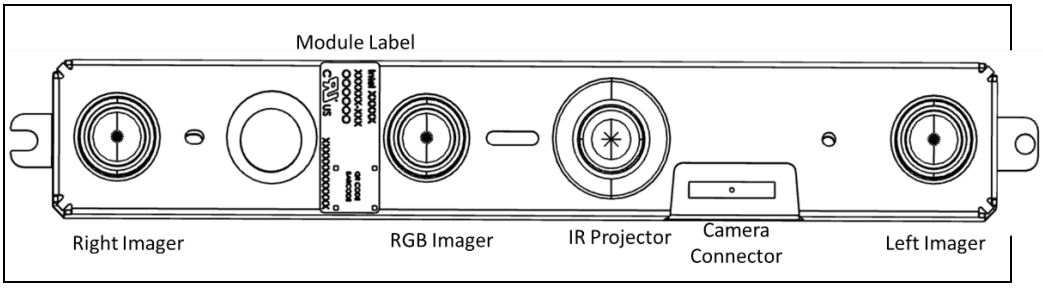

Figure 3-7. Stereo Depth Module (Intel® RealSense™ Depth Module D401)

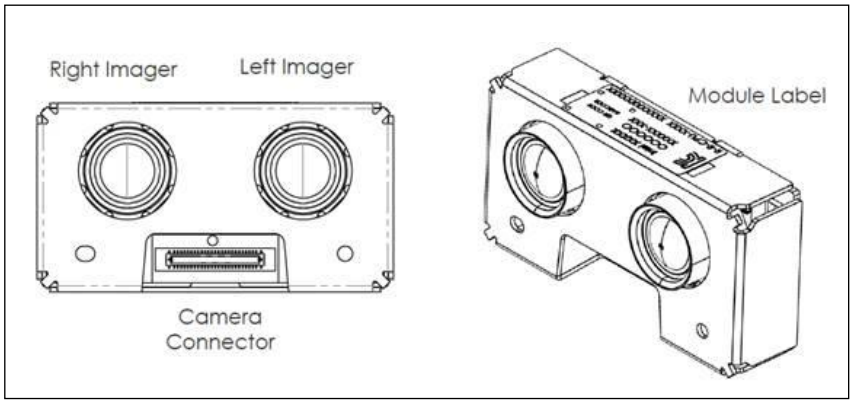

Table 3-11. Stereo Depth Module SKU Properties

Stereo Module	Intel® RealSense™ Depth Module D410	Intel® RealSense™ Depth Module D415	Intel® RealSense™ Depth Module D430	Intel® RealSense™ Depth Module D450	Intel® RealSense™ Depth Module D401
Baseline	55 mm	55 mm	50 mm	95 mm	18 mm
Left/Right Imagers Type	Standard	Standard	Wide	Wide	Wide
Depth FOV HD (16:9) (degrees)	H:65 / V:40 / D:72	H:65 / V:40 / D:72	H:87 / V:58 / D:95	H:87 / V:58 / D:95	H:84 / V:58 / D:92
Depth FOV VGA (4:3) (degrees)	H:50 / V:40 / D:61	H:50 / V:40 / D:61	H:75 / V:62 / D:89	H:75 / V:62 / D:89	-
IR Projector	Standard	Standard	Wide	Wide	-
IR Projector FOV	H:67 / V:41 / D:75	H:67 / V:41 / D:75	H:90 / V:63 / D:99	H:90 / V:63 / D:99	-
Color Sensor	-	OV2740	-	OV9782	OV9782
Color Camera FOV	-	H:69/ V:42 / D:77	-	H:90 / V:65 / D:98	H:84 / V:58 / D:92
Module Dimensions (mm)	X=74.7 mm Y=10 mm Z=4.7 mm	X=83.7 mm Y=10 mm Z=4.7 mm	X=70.7 mm Y=14 mm Z=10.53 mm	X=119.5 mm Y=17.4 mm Z=10.53 mm	X=36.5 mm Y=19.4 mm Z=10.5 mm

Notes:

1. H = Horizonal FOV, V = Vertical FOV, D = Diagonal FOV, X = Length, Y = Breadth, Z = Thickness

2. Depth FOV specified at 0.2 m for D401 and at 2 m for other modules

3. Due to mechanical tolerances of ± 5%, Max and Min FOV values can vary from lens to lens and module to module by ~ ± 3 degrees

3.6.1 Left and Right Imagers

The stereo depth module has two camera sensors referred to here as imagers; they are identical parts and are configured with identical settings. The imagers are labeled "left" and "right" from the perspective of the camera module looking outward. The stereo imager pairs are referred as Standard or Wide based on imager field of view.

Table 3-12. Standard Left and Right Imager Properties – D410/D415

Parameter	Camera Sensor Properties
Image Sensor	OmniVision Technologies OV2740
Active Pixels	1920 × 1080
Sensor Aspect Ratio	16:9
Format	10-bit RAW
F Number	f/2.0
Focal Length	1.88 mm
Filter Type	None
Focus	Fixed
Shutter Type	Rolling Shutter
Signal Interface	MIPI CSI-2, 2X Lanes
Horizontal Field of View	69.4°
Vertical Field of View	42.5°
Diagonal Field of View	77°
Distortion	<= 1.5%

Table 3-13. Wide Left and Right Imager Properties – D430

Parameter	Camera Sensor Properties
Image Sensor	OmniVision Technologies OV9282
Active Pixels	1280 x 800
Sensor Aspect Ratio	8:5
Format	10-bit RAW
F Number	f/2.0
Focal Length	1.93 mm
Filter Type	None
Focus	Fixed
Shutter Type	Global Shutter

Parameter	Camera Sensor Properties
Signal Interface	MIPI CSI-2, 2X Lanes
Horizontal Field of View	91.2°
Vertical Field of View	65.5°
Diagonal Field of View	100.6°
Distortion	<= 1.5%

Table 3-14. Wide Left and Right Imager Properties – D450

Parameter	Camera Sensor Properties
Image Sensor	OmniVision Technologies OV9782
Active Pixels	1280 x 800
Sensor Aspect Ratio	8:5
Format	10-bit RAW
F Number	f/2.0
Focal Length	1.93 mm
Filter Type	None
Focus	Fixed
Shutter Type	Global Shutter
Signal Interface	MIPI CSI-2, 2X Lanes
Horizontal Field of View	90 ± 1°
Vertical Field of View	65 ± 1°
Diagonal Field of View	95 ± 1°
Distortion	<= 1.5%

Table 3-15. Wide Left and Right Imager Properties – D401

Parameter	Camera Sensor Properties
Image Sensor	OmniVision Technologies OV9782
Active Pixels	1280 x 800
Sensor Aspect Ratio	8:5
Format	10-bit RAW
F Number	f/2.0
Focal Length	1.93 mm
Filter Type	IR Cut Filter
Focus	Fixed
Shutter Type	Global Shutter
Signal Interface	MIPI CSI-2, 2X Lanes

Horizontal Field of View	84 ± 1°
Vertical Field of View	58 ± 1°
Diagonal Field of View	92 ± 1°
Distortion	<= 1.5%

Note:

1. D401 Depth FOV specified at 200 mm

3.6.2 Infrared Projector

The infrared projector improves the ability of the stereo camera system to determine depth by projecting a static infrared pattern on the scene to increase texture on low texture scenes. The infrared projector meets the Class 1 laser safety standard under normal operation. The power delivery and laser safety circuits are on the stereo depth module. The infrared projector is referred as Standard or Wide based on field of projection.

Table 3-16. Standard (D41x) Infrared Projector Parameters

Parameter	Properties
Projector	Infrared
Pattern Type	Static
Illuminating Component	Vertical-cavity surface-emitting laser (VCSEL) + Optics
Laser Controller	PWM
Optical Power	360 mW average
Laser Wavelength	850 nm ± 10 nm nominal @ 20°C
Laser Compliance(*)	Class 1, IEC 60825-1:2007 Edition 2, IEC 60825-1:2014 Edition 3
Horizontal Field of Projection	64°±3°
Vertical Field of Projection	41°±3°
Diagonal Field of Projection	72°±3°

Note:

(*) IR projector is considered Class 1 when integrated into Intel® RealSense™ Depth Cameras. Also considered Class 1 when depth module is paired with Intel® RealSense™ Vision Processor D4 Board and integration guidelines are used.

Table 3-17. Wide (D43x, D45x) Infrared Projector Parameters

Parameter	Properties
Projector	Infrared
Pattern Type	Static
Illuminating Component	Vertical-cavity surface-emitting laser (VCSEL) + optics
Laser Controller	PWM

Parameter	Properties
Optical Power	360mW average
Laser Wavelength	850nm ± 10 nm nominal @ 20°C
Laser Compliance(*)	Class 1, IEC 60825-1:2007 Edition 2, IEC 60825-1:2014 Edition 3
Horizontal Field of Projection	90°±3°
Vertical Field of Projection	63°±3°
Diagonal Field of Projection	99°±3°
Note: (*) IR projector is considered Class 1 when integrated into Intel® RealSense™ Depth Cameras. Also considered Class 1 when depth module is paired with Intel® RealSense™ Vision Processor D4 Board and integration guidelines are used.	

3.6.3 Color Sensor

The color sensor on the stereo depth module, in addition to generating a color image, provides texture information. Usages for the texture information include overlay on a depth image to create a colorized point cloud and overlay on a 3D model for reconstruction.

Table 3-18. Color Sensor Properties – D415

Parameter	Camera Sensor Properties
Image Sensor	OmniVision Technologies OV2740
Color Image Signal Processor	Discrete
Active Pixels	1920 x 1080
Sensor Aspect Ratio	16:9
Format	10-bit RAW RGB
F Number	f/2.0
Focal Length	1.88 mm
Filter Type	IR Cut Filter
Focus	Fixed
Shutter Type	Rolling Shutter
Signal Interface	MIPI CSI-2, 1 Lane
Horizontal Field of View	69.4°
Vertical Field of View	42.5°
Diagonal Field of View	77°
Distortion	<= 1.5%

Table 3-19. Color Sensor Properties – D450

Parameter	Camera Sensor Properties
Image Sensor	OmniVision Technologies OV9782
Color Image Signal Processor	Discrete
Active Pixels	1280 x 800
Sensor Aspect Ratio	16:10
Format	10-bit RAW RGB
F Number	f/2.0
Focal Length	1.93 mm
Filter Type	IR Cut Filter
Focus	Fixed
Shutter Type	Global Shutter
Signal Interface	MIPI CSI-2, 1 Lane
Horizontal Field of View	90°
Vertical Field of View	65°
Diagonal Field of View	98°
Distortion	<= 1.5%

Table 3-20. Color Sensor Properties – D401*

Parameter	Camera Sensor Properties
Image Sensor	OmniVision Technologies OV9782
Color Image Signal Processor	Discrete
Active Pixels	1280 x 800
Sensor Aspect Ratio	8:5
Format	10-bit RAW
F Number	f/2.0
Focal Length	1.93 mm
Filter Type	IR Cut Filter
Focus	Fixed
Shutter Type	Global Shutter
Signal Interface	MIPI CSI-2, 2X lanes
Horizontal Field of View	84 ± 1°
Vertical Field of View	58 ± 1°
Diagonal Field of View	92 ± 1°
Distortion	<= 1.5%
Note:	

(*) D401 does not contain a dedicated RGB sensor. D401's left depth sensor provides RGB data to the color ISP.

3.6.4 Depth Module Connector

The depth module connector provides the signal and power interface to the stereo depth module. The connector on the stereo depth module is a 50-pin connector plug.

Table 3-21. Depth Module 50-pin Connector Plug Details

Parameter	Description	Diagram
Number of Contacts	50	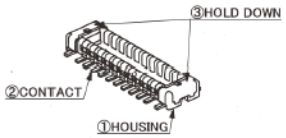
Product Name	NOVASTACK 35-P Plug Assembly	
Part Number	20708-050E	
Manufacturer Website	www.i-pex.com	

3.6.5 Stereo Depth Module Label

Table 3-22. Stereo Depth Module Product Labeling

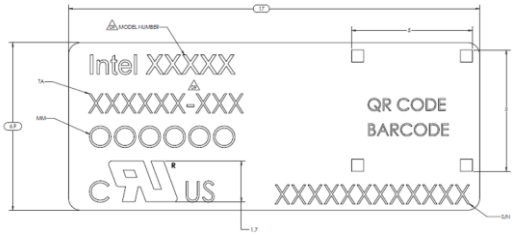

For illustration purpose only, subject to change

	Dimension	Value	Unit
A	Label Width	17	mm
B	Label Height	6.9	mm
C	Scan Code Width	5	mm
D	Scan Code Height	5	mm

Scan Code Format
XXXXXXXXXXXXOOOOOOXXXXXX-XXX

Table 3-23. Stereo Depth Module Label Fields

Group	Field	Description	Type
Company	Intel	Manufacturer	Static
Model Number	RealSense™ Camera 4XX	Camera Model Number	Static
	XXXXXX	Product Identifier Code	Static

Product Assembly Number	-XXX	Manufacture Configuration Code	Dynamic
	OOOOOO	Product Material Code	Static
Serial Number	XXXXXXXXXXXX	Manufacture Unit Code	Dynamic
Note: 1. Product Material Code (MM code) within the QR code on the label of the device will read "000000". The QR code MM code will be zero.			

Table 3-24. Intel® RealSense™ Depth Module D400 Series Product Identifier Code and Product Material Code

Production	Product Identifier Code-Manufacture Configuration Code	Product Material Code
Depth Module D410	J32106-100	951913
Depth Module D415	J32114-100	952000
Depth Module D420	J51355-100	956826
Depth Module D450	K83121-100	999WCM
Depth Module D401	M31768-100	99ACXA

3.6.6 Stiffener

The stiffener maintains the precise alignment of the camera sensors and assists in subassembly rigidity. The stiffener consists of a bottom and a top plate. The stiffener is of stainless steel grade AISI 304.

3.6.7 Temperature Sensor

The stereo depth module is equipped with a thermal sensor that is used for laser safety control (IR Projector). The Intel® RealSense™ SDK 2.0 library provides access to the thermal sensor readouts. Temperature information does not reflect the ambient temperature of the module.

3.6.8 Other Stereo Depth Module Components

Table 3-25. Other Stereo Depth Module Components

Component	Description
Laser (IR Projector) Driver	The depth module implements a laser driver which controls the infrared laser within the infrared projector system.

Laser (IR projector) Thermal Control	The depth module implements a laser safety control circuit that adjusts laser drive output. When laser power and depth streaming is enabled and if stereo depth module temperature is >60°C, laser power is halved. If temperature is not lowered below temperature limit within a certain interval, the laser is shut off.
EEPROM	The depth module implements flash memory for storing the calibration data
Fork/Screw Mount	Secure placement and mounting to system/chassis/heat sink
Voltage Regulators	The stereo depth module implements DC to DC voltage converters

3.6.9 Mechanical Dimensions

Table 3-26. Intel® RealSense™ Depth Module D410 Mechanical Dimensions

Dimension	Min	Nominal	Max	Unit
Width	74.5	74.7	74.9	mm
Height	9.8	10	10.2	mm
Depth	4.5	4.7	4.9	mm
Flatness Tolerance	0	-	0.2	mm
Weight	7.3	8.1	8.9	g

Table 3-27. Intel® RealSense™ Depth Module D415 Mechanical Dimensions

Dimension	Min	Nominal	Max	Unit
Width	89.5	89.7	89.9	mm
Height	9.8	10	10.2	mm
Depth	4.5	4.7	4.9	mm
Flatness Tolerance	0	-	0.2	mm
Weight		11		g

Table 3-28. Intel® RealSense™ Depth Module D430 Mechanical Dimensions

Dimension	Min	Nominal	Max	Unit
Width	70.5	70.7	70.9	mm
Height	13.8	14	14.2	mm
Depth	10.33	10.53	10.73	mm
Flatness Tolerance	0	-	0.2	mm
Weight	13	14.5	16	g

Table 3-29. Intel® RealSense™ Depth Module D450 Mechanical Dimensions

Dimension	Min	Nominal	Max	Unit
Width	119.3	119.5	119.7	mm
Height	17.2	17.4	17.6	mm
Depth	10.33	10.53	10.73	mm
Flatness Tolerance	0	-	0.25	mm
Weight		29.5		g

Table 3-30. Intel® RealSense™ Depth Module D401 Mechanical Dimensions

Dimension	Min	Nominal	Max	Unit
Width	36.3	36.5	36.7	mm
Height	19.2	19.4	19.6	mm
Depth	10.3	10.5	10.7	mm
Flatness Tolerance	-	0.15	-	mm
Weight	9.9	10.9	11	g

3.6.10 Stereo Depth Module Power Sequence

Figure 3-8. Stereo Depth Module Power Sequence

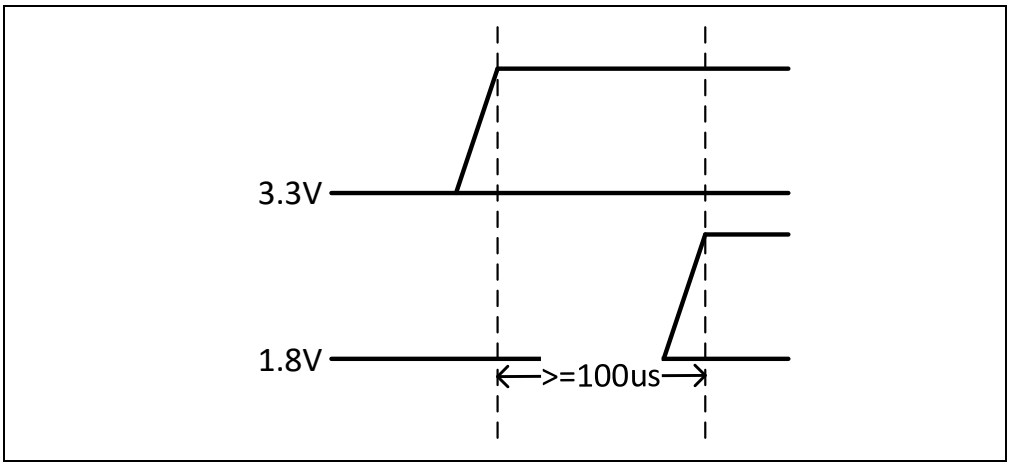

3.6.11 Stereo Depth Module Storage and Powered Conditions

Table 3-31. Stereo Depth Module Storage and Powered Conditions

Condition	Description	Min	Max	Unit
Storage (Ambient), Not Powered (6)	Temperature (Sustained, Controlled)(1)	0	50	ºC

	Temperature (Short Exposure)(2)	-40	70	°C
	Humidity	Temperature / RH: 40°C / 90%		
Case Temperature, Powered (3)(4)(5)(6)	Temperature	0	50	°C

Notes:

(1) Controlled conditions should be used for long term storage of product

(2) Short exposure represents temporary max limits acceptable for transportation conditions

(3) Case temperature limits must be met for all temperatures when powered

(4) Case temperature is specified for the overall depth module

(5) Case temperature 0° minimum and lower temperatures is non-condensing

(6) Although all Key Performance Indicators (KPIs) are verified before leaving Intel's factory, KPIs may be negatively impacted by extended exposure to excessive temperatures and humidity

3.7 Intel® RealSense™ Vision Processor D4 Board

The Vision Processor D4 Board enables an easy and quick option for system integrators to integrate Vision Processor D4 into a system.

Table 3-32. Vision Processor D4 Board

Type	Description
USB Peripheral Type-C	Connects to Host USB 3.1 Gen 1 port through USB Type-C connector and cable Note: When connecting to host system, connect Type-C cable to camera prior to connecting device to host system port.

Table 3-33. Vision Processor D4 Board Components

Components	Description
Vision Processor D4	Stereo Depth Processing ASIC
16 Mb Serial Flash	Vision Processor D4 firmware storage
24 MHz Crystal	Clock source for Vision Processor D4
Realtek* ISP with external serial flash	Color image signal processor
Depth Module Receptacle	50-pin receptacle for connection to Stereo Depth Module
USB Type-C	USB peripheral connector for connection to Host USB 2.0/USB 3.1 Gen 1 port
External Sensor Sync Connector	Interface to external sensor interrupts/sync signals

Components	Description
Voltage Regulators	DC to DC converters powering Vision Processor D4 Board and stereo depth module.
Mounting holes	Vision Processor D4 Board secure mounting

Figure 3-9. Vision Processor D4 Board (V1 and V3) (USB Peripheral Type-C)

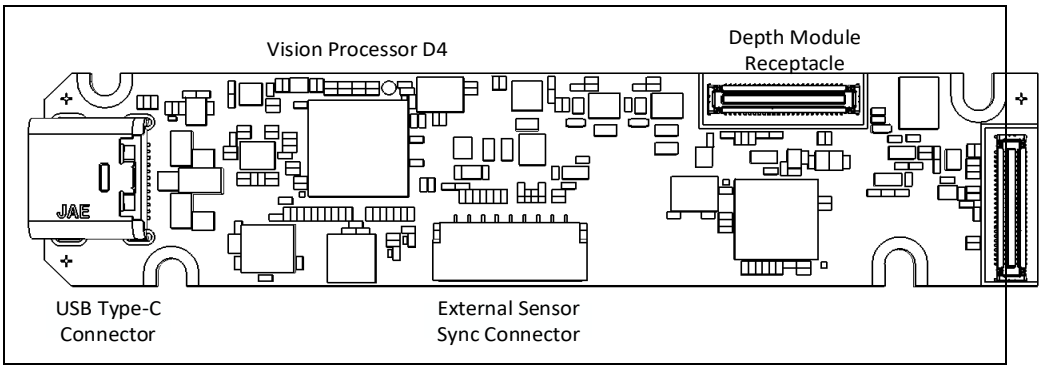

Figure 3-10. Vision Processor D4 Board (V4) (USB3 Peripheral Micro-B)

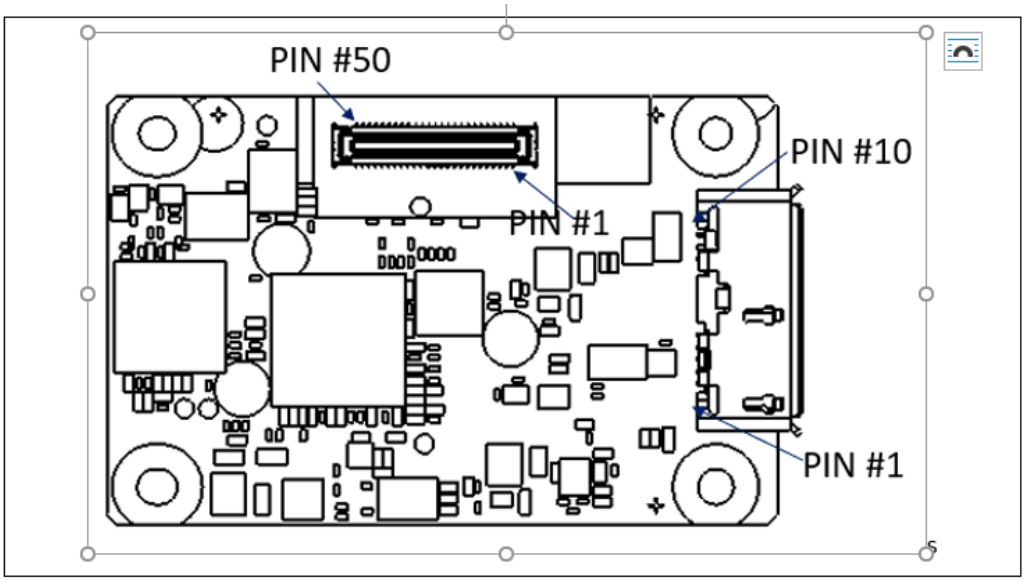

3.7.1 Mechanical Dimensions

Table 3-34. Vision Processor D4 USB Type-C V1/V3 Board Mechanical Dimensions

Dimension	Min	Nominal	Max	Unit
Width	72.2	72.4	72.6	mm
Height	15.8	16	16.2	mm

Depth	3.74	3.94	4.14	mm
Weight	3.56	3.96	4.36	g

Table 3-35. Vision Processor D4 USB3 Micro-B V4 Board Mechanical Dimensions

Dimension	Min	Nominal	Max	Unit
Width	35.9	36	36.1	mm
Height	22.9	23	23.1	mm
Depth	2.48	2.63	2.78	mm
Weight	1.1	2.7	3.2	g

3.7.2 Depth Module Receptacle

The Vision Processor D4 Board interface to stereo depth module is through 50-pin receptacle on the board.

Table 3-36. Depth Module Receptacle Details

Parameter	Description	Diagram
Number of Contacts	50	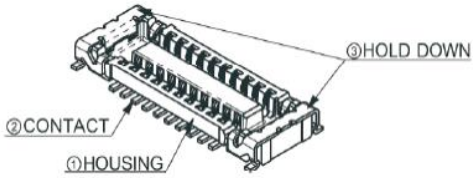
Product Name	NOVASTACK* 35-P Receptacle Assembly	
Part Number	20709-050E	
Manufacturer Website	www.i-pex.com	

3.7.3 Flex and Rigid Interposer Interconnect

The high-speed interposer at one end has the 50-pin depth module receptacle to connect into 50-pin depth module plug on stereo depth module, and at the other end has the 50-pin depth module plug to connect into 50-pin depth module receptacle on Vision Processor D4 Board. The high-speed flex interposer is custom developed and procured by system integrator.

Figure 3-11. Flex Interposer – D415, D435, D435i, D435f, D455 (Illustration)

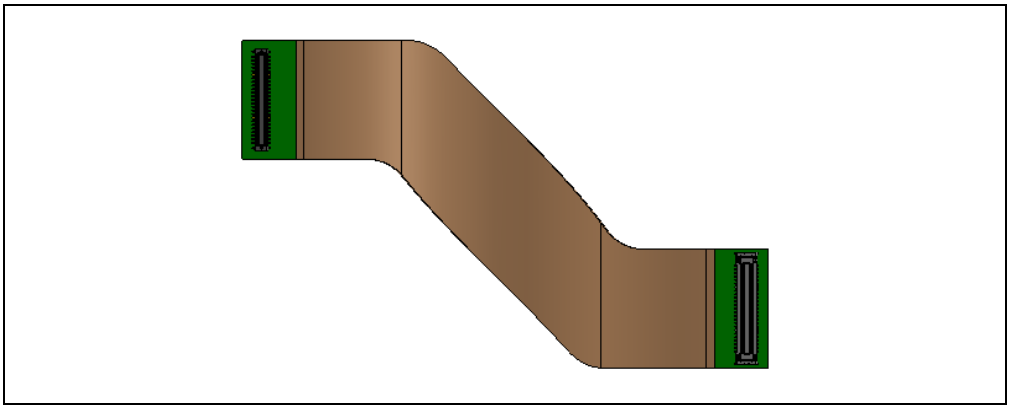

Figure 3-12. Rigid Interposer – D415, D435, D435i, D435f, D455 (Illustration)

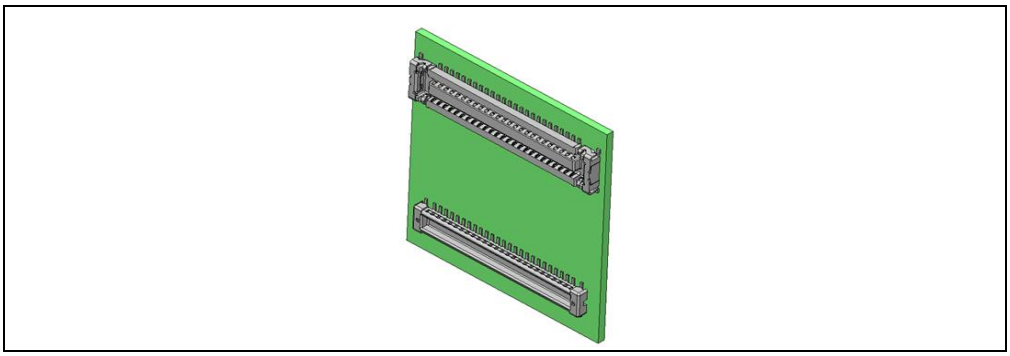

Figure 3-13. Depth Module Receptacle and Plug Connector Pin Position – D415, D435, D435i, D435f, D455

52 (VDD 3.3V)

GND	2	1	RGB_RSTN
RGB_MDP0	4	3	RGB_XCL
RGB_MDN0	6	5	GND
GND	8	7	RGB_FSYNC
RGB_MCP	10	9	RGB_STROBE
RGB_MCN	12	11	RGB_SDA
GND	14	13	RGB_SCL
MDP0_L	16	15	GND
MDN0_L	18	17	VDD18V
GND	20	19	VDD18V
MCP_L	22	21	LED_PSY
MCN_L	24	23	DVSYNC
GND	26	25	NC
MDP1_L	28	27	XVCLK_L
MDN1_L	30	29	GND
GND	32	31	ST_RST_N
MDP0_R	34	33	FF_RSTn
MDN0_R	36	35	GND
GND	38	37	XVCLK_R
MCP_R	40	39	I2C_SCL
MCN_R	42	41	I2C_SDA
GND	44	43	LASER_PWM
MDP1_R	46	45	LASER_PWRDN
MDN1_R	48	47	LASER_PWM1
GND	50	49	FLAGB

51 (GND)

Table 3-37. Interposer Interconnect Signal Description – D415, D435, D435i, D435f, D455

Position	ASIC Board/ Motherboard	Depth Module	Interconnect Description
1	RGB_RSTN_N	RGB_RSTN_N	RGB Sensor Reset
2	GND	GND	Ground
3	RGB_XCL	RGB_XCL	RGB Sensor Clock
4	RGB_MDP0	RGB_MDP0	RGB Sensor MIPI Data Lane 0 differential pair positive
5	GND	GND	Ground

Position	ASIC Board/ Motherboard	Depth Module	Interconnect Description
6	RGB_MDN0	RGB_MDN0	RGB Sensor MIPI Data Lane 0 differential pair negative
7	RGB_FSYNC	RGB_FSYNC	RGB Sensor Sync
8	GND	GND	Ground
9	RGB_STROBE	RGB_STROBE	RGB Sensor Strobe
10	RGB_MCP	RGB_MCP	RGB Sensor MIPI Clock differential pair positive
11	RGB_SDA	RGB_SDA	RGB Sensor I2C Bus Data
12	RGB_MCN	RGB_MCN	RGB Sensor MIPI Clock differential pair negative
13	RGB_SCL	RGB_SCL	RGB Sensor I2C Bus Clock
14	GND	GND	Ground
15	GND	GND	Ground
16	MDP0_L	MDP0_L	Left Imager MIPI Data Lane 0 differential pair positive
17	VDD18V	VDD18V	1.8 V Power
18	MDN0_L	MDN0_L	Left Imager MIPI Data Lane 0 differential pair negative
19	VDD18V	VDD18V	1.8 V Power
20	GND	GND	Ground
21	LED_PSY	LED_PSY	Privacy LED control signal
22	MCP_L	MCP_L	Left Imager MIPI Clock differential pair positive
23	DVSYNC	DVSYNC	VSYNC
24	MCN_L	MCN_L	Left Imager MIPI Clock differential pair negative
25	NC	NC	No Connect
26	GND	GND	Ground
27	XVCLK_L	XVCLK_L	Clock to Left Imager
28	MDP1_L	MDP1_L	Left Imager MIPI Data Lane 1 differential pair positive
29	GND	GND	Ground
30	MDN1_L	MDN1_L	Left Imager MIPI Data Lane 1 differential pair negative
31	ST_RST_N	ST_RST_N	Reset signal to Left and Right Imager
32	GND	GND	Ground
33	FF_RSTn	FF_RSTn	Laser Error
34	MDP0_R	MDP0_R	Right Imager MIPI Data Lane 0 differential pair positive
35	GND	GND	Ground
36	MDN0_R	MDN0_R	Right Imager MIPI Data Lane 0 differential pair negative

Position	ASIC Board/ Motherboard	Depth Module	Interconnect Description
37	XVCLK_R	XVCLK_R	Clock to Right Imager
38	GND	GND	Ground
39	I2C_SCL	I2C_SCL	I2C Bus Clock
40	MCP_R	MCP_R	Right Imager MIPI Clock differential pair positive
41	I2C_SDA	I2C_SDA	I2C Bus Data
42	MCN_R	MCN_R	Right Imager MIPI Clock differential pair negative
43	LASER_PWM	LASER_PWM	IR Projector Control Signal
44	GND	GND	Ground
45	LASER_PWRDN	LASER_PWRDN	IR Projector Power Down
46	MDP1_R	MDP1_R	Right Imager MIPI Data Lane 1 differential pair positive
47	LASER_PWM1	LASER_PWM1	IR Projector Control Signal
48	MDN1_R	MDN1_R	Right Imager MIPI Data Lane 1 differential pair negative
49	FLAGB	FLAGB	IR Projector Fault Detect
50	GND	GND	Ground
51	GND	GND	Ground
52	VDD33V	VDD33V	3.3 V power

Figure 3-14. Depth Module Connector Orientation and Pin Position – D415, D435, D435i, D435f, D455

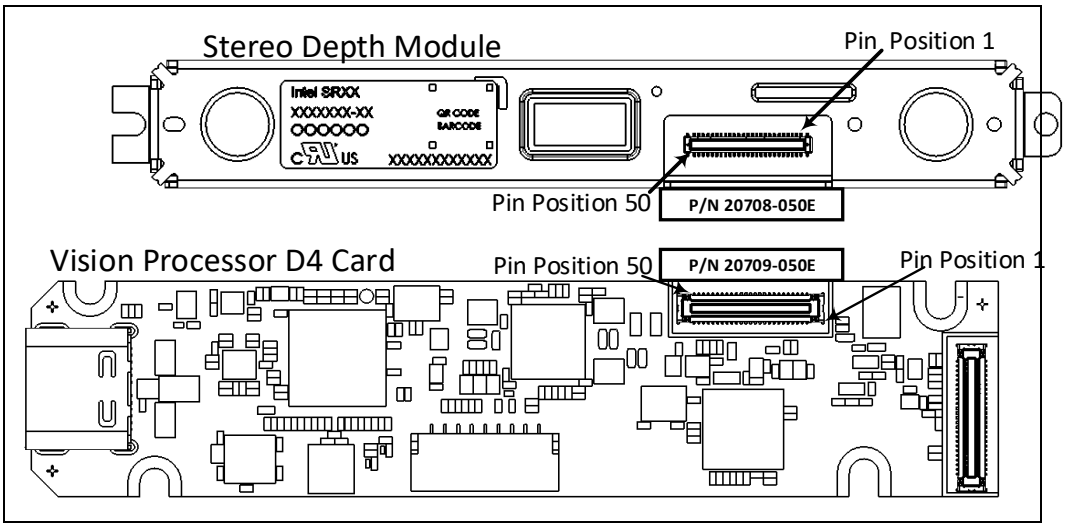

Figure 3-15. Flex Interposer – D401 (Illustration)

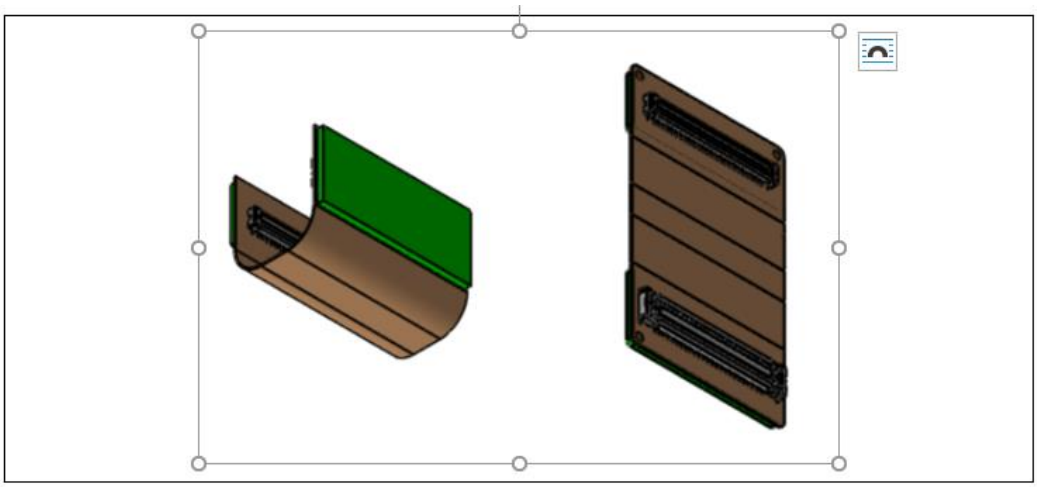

Figure 3-16. Depth Module Receptacle and Plug Connector Pin Position – D401

	51, 52 (VDD 3.3V)		
GND	2	1	
	4	3	
	6	5	**GND**
GND	8	7	
	10	9	
	12	11	
GND	14	13	
MDP0_L	16	15	**GND**
MDN0_L	18	17	**VDD18V**
GND	20	19	**VDD18V**
MCP_L	22	21	
MCN_L	24	23	FSYNC
GND	26	25	FSTROBE
MDP1_L	28	27	XVCLK_L
MDN1_L	30	29	**GND**
GND	32	31	RST_N
MDP0_R	34	33	
MDN0_R	36	35	**GND**
GND	38	37	XVCLK_R
MCP_R	40	39	I2C_SCL
MCN_R	42	41	I2C_SDA

GND	44	43	
MDP1_R	46	45	
MDN1_R	48	47	
GND	50	49	
	53, 54 (GND)		

Table 3-38. Interposer Interconnect Signal Description - D401

Position	ASIC Board/ Motherboard	Depth Module	Position	Interconnect Description
1			1	
2	GND	GND	2	Ground
3			3	
4			4	
5	GND	GND	5	Ground
6			6	
7			7	
8	GND	GND	8	Ground
9			9	
10			10	
11			11	
12			12	
13			13	
14	GND	GND	14	Ground
15	GND	GND	15	Ground
16	MDP0_L	MDP0_L	16	Left Imager MIPI Data Lane 0 differential pair positive
17	VDD18V	VDD18V	17	1.8 V Power
18	MDN0_L	MDN0_L	18	Left Imager MIPI Data Lane 0 differential pair negative
19	VDD18V	VDD18V	19	1.8 V Power
20	GND	GND	20	Ground
21			21	
22	MCP_L	MCP_L	22	Left Imager MIPI Clock differential pair positive
23	DVSYNC	DVSYNC	23	VSYNC
24	MCN_L	MCN_L	24	Left Imager MIPI Clock differential pair negative
25	FSTROBE	FSTROBE	25	Depth Strobe signal

Position	ASIC Board/ Motherboard	Depth Module	Position	Interconnect Description
26	GND	GND	26	Ground
27	XVCLK_L	XVCLK_L	27	Clock to Left Imager
28	MDP1_L	MDP1_L	28	Left Imager MIPI Data Lane 1 differential pair positive
29	GND	GND	29	Ground
30	MDN1_L	MDN1_L	30	Left Imager MIPI Data Lane 1 differential pair negative
31	ST_RST_N	ST_RST_N	31	Reset signal to Left and Right Imager
32	GND	GND	32	Ground
33			33	
34	MDP0_R	MDP0_R	34	Right Imager MIPI Data Lane 0 differential pair positive
35	GND	GND	35	Ground
36	MDN0_R	MDN0_R	36	Right Imager MIPI Data Lane 0 differential pair negative
37	XVCLK_R	XVCLK_R	37	Clock to Right Imager
38	GND	GND	38	Ground
39	I2C_SCL	I2C_SCL	39	I^2C Bus Clock
40	MCP_R	MCP_R	40	Right Imager MIPI Clock differential pair positive
41	I2C_SDA	I2C_SDA	41	I^2C Bus Data
42	MCN_R	MCN_R	42	Right Imager MIPI Clock differential pair negative
43			43	
44	GND	GND	44	Ground
45			45	
46	MDP1_R	MDP1_R	46	Right Imager MIPI Data Lane 1 differential pair positive
47			47	
48	MDN1_R	MDN1_R	48	Right Imager MIPI Data Lane 1 differential pair negative
49			49	
50	GND	GND	50	Ground
51	VDD33V	VDD33V	52	3.3 V power
52	VDD33V			
53	GND	GND	51	Ground

Figure 3-17. Depth Module Connector Orientation and Pin Position – D401

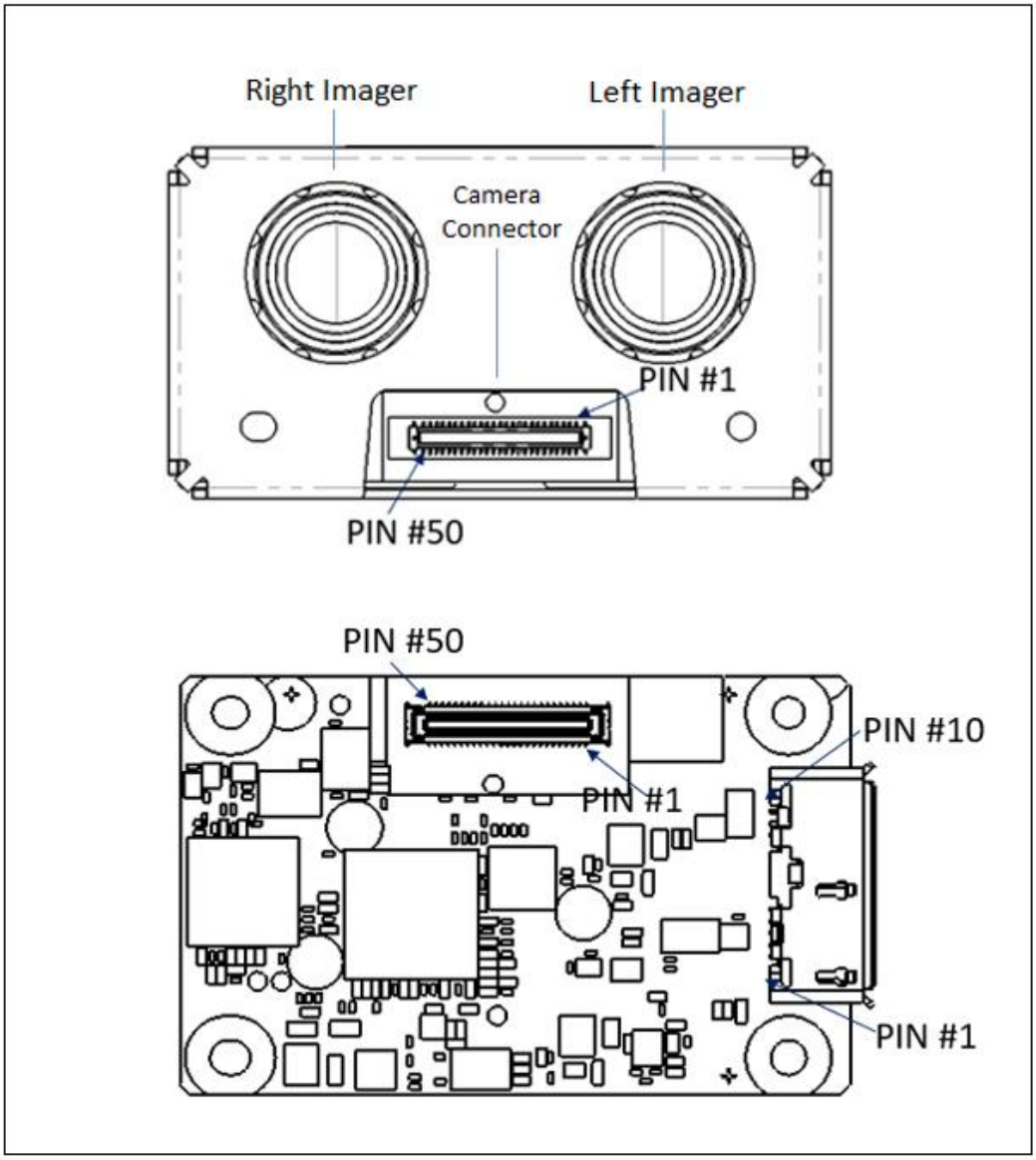

Table 3-39. Custom Flex Interposer Ordering Logistics

Vendor	Sales Contact
COCOM CONSUMER ELECTRONICS LTD.	Name: Janine Langdale Email: Janine.Langdale@cc-e.co.uk Office phone: +44 (0) 1444 461620 Mobile phone: +44 (0) 7905 692131

3.7.4 External Sensor Sync Connector

The external sensor connector provides the interface for external sensors to synchronize to depth output.

For D415 and D455, both the depth and RGB sensors can be synced by an external trigger.

For D435, D435i, and D435f, only the depth sensor can be synced by an external trigger.

For D401, the external sync mechanism is not exposed.

Table 3-40. External Sensor Connector Details

Parameter	Description	Diagram
Number of Contacts	9	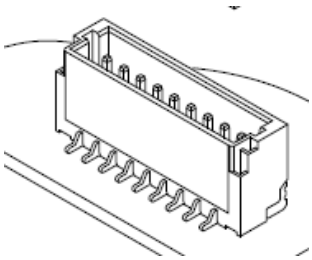
Product Name	9 Positions Header, Shrouded Connector	
Part Number	SM09B-SRSS-TB(LF)(SN)	
Manufacturer Website	www.jst-mfg.com	

Table 3-41. External Sensor Sync Connector Pin List

Pin	Signal	Function	Description
1	GPIO3	GVSYNC0	Not Defined
2	GPIO4	GVSYNC1	IR Projector Power Down signal
3	GPIO5	GVSYNC2	External IR Projector Fault Detect
4	GPIO6	GVSYNC3	External IR Projector
5	Z_VSYNC	VSYNC	Depth VSYNC
6	LASER_PWM0	LASER PWM0	Laser control signal
7	LASER_PWM1	LASER PWM1	Laser control signal
8	VDD33V	Power	3.3 V
9	GND	Ground	Ground

3.7.5 USB Peripheral Connector – Type-C – D415, D435, D435i, D435f, D455

USB Type-C connector consists of 24 signal pins designed in a symmetrical way. The connector z-height is as low as 3 mm and enables enhanced user experience

by allowing the USB Type-C plug to be plugged into a receptacle either right side up or upside down. Interoperability between USB Type-C and legacy USB is possible through standard legacy cable assemblies defined in USB Type-C Cable and Connector specification.

Recommend using a certified USB Type-C cable with locking connector for use with Intel® RealSense™ Camera D400 Series products.

Figure 3-18. USB Type-C Receptacle Pin Map

A1	A2	A3	A4	A5	A6	A7	A8	A9	A10	A11	A12
GND	TX1+	TX1–	VBUS	CC1	D+	D–	SBU1	VBUS	RX2–	RX2+	GND
GND	RX1+	RX1–	VBUS	SBU2	D–	D+	CC2	VBUS	TX2–	TX2+	GND
B12	B11	B10	B9	B8	B7	B6	B5	B4	B3	B2	B1

Table 3-42. USB Peripheral Connector Pin List

Pin	Signal	Function	Description
A1	GND	Power Delivery	Ground
A2	TX1+	USB 3.1 Gen 1 Data	First SuperSpeed TX Differential Pair Positive
A3	TX1-	USB 3.1 Gen 1 Data	First SuperSpeed TX Differential Pair Negative
A4	VBUS	Power Delivery	5 V
A5	CC1	Control	Configuration Channel 1
A6	D+	USB2.0 Data	USB 2.0 differential pair positive
A7	D-	USB2.0 Data	USB 2.0 differential pair negative
A8	SBU1	Sideband	Sideband Use Signal 1
A9	VBUS	Power Delivery	5 V
A10	RX2-	USB 3.1 Gen 1 Data	Second SuperSpeed RX Differential Pair Negative
A11	RX2+	USB 3.1 Gen 1 Data	Second SuperSpeed RX Differential Pair Positive
A12	GND	Power Delivery	Ground
B1	GND	Power Delivery	Ground
B2	TX2+	USB 3.1 Gen 1 Data	Second SuperSpeed TX Differential Pair Positive
B3	TX2-	USB 3.1 Gen 1 Data	Second SuperSpeed TX Differential Pair Negative
B4	VBUS	Power Delivery	5 V
B5	CC2	Control	Configuration Channel 2
B6	D+	USB 2.0 Data	USB 2.0 differential pair positive
B7	D-	USB 2.0 Data	USB 2.0 differential pair negative
B8	SBU2	Sideband	Sideband Use Signal 2
B9	VBUS	Power Delivery	5 V
B10	RX1-	USB 3.1 Gen 1.0 Data	First SuperSpeed RX Differential Pair Negative

Pin	Signal	Function	Description
B11	RX1+	USB 3.1 Gen 1.0 Data	First SuperSpeed RX Differential Pair Positive
B12	GND	Power Delivery	Ground

3.7.6 USB Peripheral Connector – Micro-B (D405)

USB Micro-B connector consists of 10 signal pins with a connector Z-height of 1.8mm.

Intel recommends using a certified USB Micro-B cable and connector for use with the Intel® RealSense™ Camera D401/405 Series products.

Figure 3-19. USB3 Micro-B Receptacle Pin Map

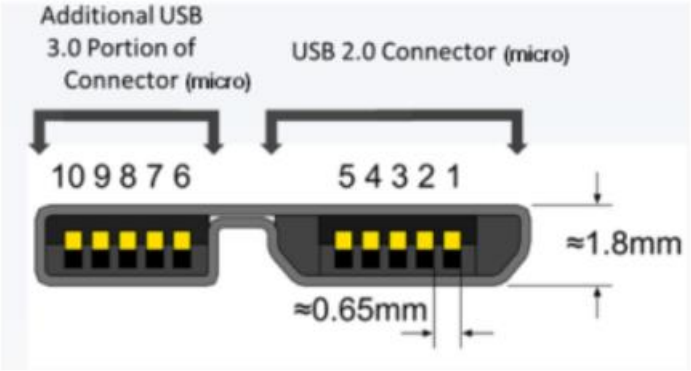

Pin	Name	Cable Color	Function
1	VCC	Red	+5V DC
2	D-	White	Data -
3	D+	Green	Data +
4	ID	Dark blue (often)	Mode detect
5	GND	Black	Ground
6	USB3 SSTX-	Blue	SuperSpeed transmit -
7	USB3 SSTX+	Yellow	SuperSpeed transmit +
8	GND	N/A	Ground signal return
9	USB3 SSRX-	Purple	SuperSpeed receive -
10	USB3 SSRX+	Orange	SuperSpeed receive +

Table 3-43. USB Peripheral Connector Pin List – D405

Pin Number	Signal Name	Description	Mating Sequence
1	VBUS	Power	Second
2	D-	USB 2.0 differential pair	Last

3	D+		
4	ID	OTG Identification	
5	GND	Ground for power return	Second
6	MicB_SSTX-	SuperSpeed transmitter differential	Last
7	MicB_SSTX+		
8	GND_DRAIN	Ground for SuperSpeed signal return	Second
9	MicB_SSRX-	SuperSpeed receiver differential pair	Last
10	MicB_SSRX+		
Shell	Shield	Connector metal shell	First

3.7.7 Color Image Signal Processor (ISP)

The color sensor data is sent to discrete Image Signal Processor (ISP) on the Vision processor D4 Board for image adjustments, image scaling and processing functions to help compensate for inherent inaccuracy in lens and sensor, to provide optimal image quality. The processed color image is sent to the Vision Processor D4.

Table 3-44. ISP Properties

Parameter	ISP Properties
ISP Part Number on Vision Processor D4 Board	RTS5845
1Mb Serial Flash for ISP	Winbond* W25X10CL or equivalent
Interface To Vision Processor D4	MIPI CSI-2, 2X Lanes
Interface To RGB Sensor	MIPI CSI-2, 1X Lane

3.7.8 Vision Processor D4 Board Power Requirements

The Vision Processor D4 Board is powered through VBUS power of the USB connector. The Vision Processor D4 Board in turn power sources the stereo depth module.

Table 3-45. Vision Processor D4 Board Power Requirements

Parameter		Min	Nom	Max	Unit
VCC	Supply Voltage	4.75	5.00	5.25	V
ICC	Supply Current			700	mA
	Supply Voltage Ramp Rate	0.5		5	ms

3.7.9 Vision Processor D4 Board Thermals

The Vision Processor D4 Board should be screw mounted onto a heat sink or a heat dissipating structure element using screw forks on Board. Thermal conductive

tape (electrically non-conductive) should cover the entire back side area (non-component side) of the ASIC Board for thermal transfer onto heat sink or heat dissipating structure element.

3.7.10 Vision Processor D4 Board Storage and Powered Conditions

Table 3-46. Vision Processor D4 Board Storage and Powered Conditions

Condition	Description	Min	Max	Unit
Storage (Ambient), Not Powered	Temperature (Sustained, Controlled)(1)	0	50	ºC
	Temperature (Short Exposure)(2)	-40	70	ºC
	Humidity	Temperature/ RH: 40ºC / 90%		
Case Temperature, Powered (3)(4)(5)	Temperature	0	50	ºC

Notes:

(1) Controlled conditions should be used for long term storage of product

(2) Short exposure represents temporary max limits acceptable for transportation conditions

(3) Case temperature limits must be met for all temperatures when powered

(4) Case temperature is specified for the overall Vision Processor D4 Board

(5) Case temperature 0° minimum and lower temperatures is non-condensing

3.7.11 Intel® RealSense™ Vision Processor D4 Board Product Identifier and Material Code

Table 3-47. Vision Processor D4 Board Product Identifier and Material Code

Production	Product Identifier Code-Manufacture Configuration Code	Product Material Code	IMU Component
Vision Processor D4 Board(1)	J32139-120	952019	N/A
Vision Processor D4 Board V3(2)	K94249-110	99A2NX	BMI085
Vision Processor D4 Board V4(3)	M31706-100	99AGAR	N/A

Notes:

(1) The V1 ASIC (without IMU) is validated and supports all D400 depth modules

(2) The V3 ASIC is designed for use with the D430 and D450 Modules. Full validation has been done on this combination.

(3) The V4 ASIC is designed for use with the D401 Module. Full validation has been done on this combination.

3.8 Intel® RealSense™ Depth Camera D400 Series

Figure 3-20. Intel® RealSense™ Depth Camera D415

Figure 3-21. Intel® RealSense™ Depth Camera D435/D435i

Figure 3-22. Intel® RealSense™ Depth Camera D455

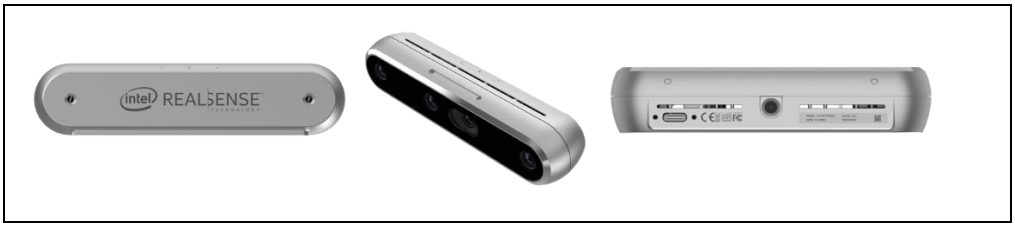

Figure 3-23. Intel® RealSense™ Depth Camera D405

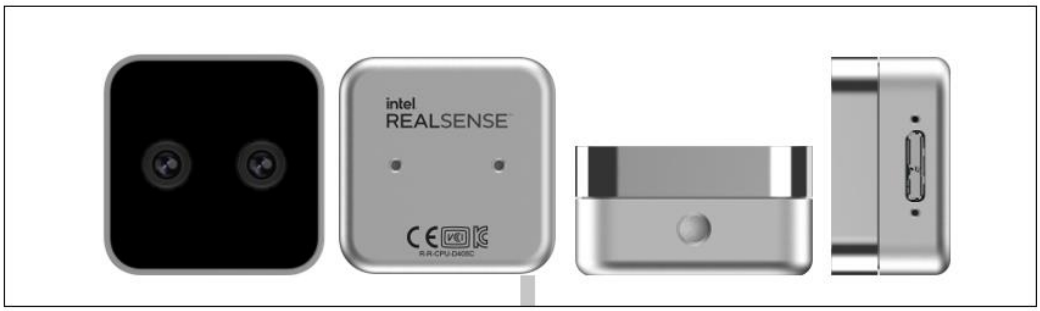

Table 3-48. Depth Camera SKU Properties

D400 series Depth Cameras	Intel® RealSense™ Depth Camera D415	Intel® RealSense™ Depth Camera D435/D435i/D435f	Intel® RealSense™ Depth Camera D455	Intel® RealSense™ Depth Camera D405
Depth module	Intel® RealSense™ Depth module D415	Intel® RealSense™ Depth module D430	Intel® RealSense™ Depth module D450	Intel® RealSense™ Depth module D401
Baseline	55mm	50mm	95mm	18mm
Left/Right Imagers Type	Standard	Wide	Wide	Wide
Depth FOV HD (16:9) (degrees)	H:65 / V:40 / D:72	H:87 / V:58 / D:95	H:87 / V:58 / D:95	H:84 / V:58 / D:92
Depth FOV VGA (4:3) (degrees)	H:50/ V:40 / D:61	H:75 / V:62 / D:89	H:75 / V:62 / D:89	N/A
IR Projector	Standard	Wide	Wide	N/A
IR Projector FOV	H:67 / V:41 / D:75	H:90 / V:63 / D:99	H:90 / V:63 / D:99	N/A
Color Sensor	OV2740	OV2740	OV9782	OV9782
Color Camera FOV	H:69 /V:42 /D:77	H:69 /V:42 /D:77	H:90 /V:65 /D:98	H:84 / V:58 / D:92
IMU	None	None/6DoF/None	6DoF	None

Notes:

1. H = Horizontal FOV, V = Vertical FOV, D = Diagonal FOV, X = Length, Y = Breadth, Z = Thickness
2. Depth FOV specified at 20 cm for D401 and at 2 m for other modules
3. Due to mechanical tolerances of +/- 5%, Max and Min FOV values can vary from lens to lens and module to module by ~ +/- 3 degrees
4. D435f = D435 with 750nm near-infrared filter (CLAREX® NIR-75N) applied to cover glass, with holes over projector and RGB sensor openings. Filter transmits near-infrared light and absorbs visible light. Filter's thickness = 0.5 mm.

Figure 3-24. Intel® RealSense™ Depth Camera D435f NIR Filter Optical Properties

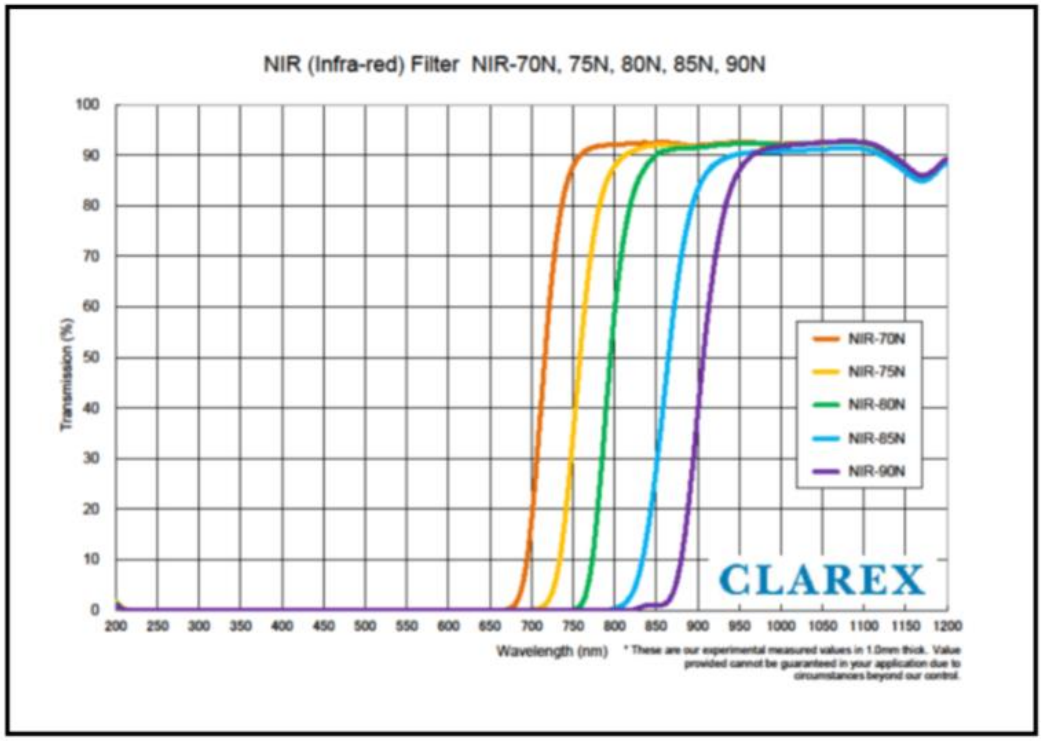

Table 3-49. D435 and D435f Comparison

Items	D435	D435f
Ambient light spectrum	Both visible and IR light	IR light only
Repetitive pattern	May cause false depth	False depth mitigated
Specular reflections	May cause image saturation	Saturation mitigated
Indoor operating range	Long (unlimited)	Limited by IR projector power
L/R images	Available in all lighting conditions	Availability limited by ambient IR strength
Calibration (OEM, Dynamic, Self)	Works in typical ambient lighting conditions	May need additional IR light

3.8.1 Depth Camera D400 Series Mechanical Dimensions

Table 3-50. Intel® RealSense™ Depth Camera D415 Mechanical Dimensions

Dimension	Min	Nominal	Max	Unit
Width	98.85	99	99.15	mm
Height	22.85	23	23.15	mm
Depth	19.85	20	20.15	mm
Weight	68.4	62	75.6	g
Flatness Tolerance	0	-	0.2	mm

Table 3-51. Intel® RealSense™ Depth Camera D435, D435i, D435f Mechanical Dimensions

Dimension	Min	Nominal	Max	Unit
Width	89.85	90	90.15	mm
Height	24.85	25	25.15	mm
Depth	24.85	25	25.15	mm
Weight	68.4	75	75.6	g
Flatness Tolerance	0	-	0.15	mm

Table 3-52. Intel® RealSense™ Depth Camera D455 Mechanical Dimensions

Dimension	Min	Nominal	Max	Unit
Width	123.5	124	124.5	mm
Height	28.5	29	29.5	mm
Depth	25.5	26	26.5	mm
Weight	114	116	118	g
Flatness Tolerance	0	-	0.2	mm

Table 3-53. Intel® RealSense™ Depth Camera D405 Mechanical Dimensions

Dimension	Min	Nominal	Max	Unit
Width	41.85	42	42.15	mm
Height	41.85	42	42.15	mm
Depth	22.85	23	23.15	mm
Weight	58	60	62	g
Flatness Tolerance	-	0.15	-	mm

3.8.2 Depth Camera D400 Series Thermals

3.8.2.1 Depth Camera D400 Series Storage and Powered Conditions

Table 3-54. Depth Camera D400 Series Storage and Powered Conditions

Condition	Description	Min	Max	Unit
Storage (Ambient), Not Powered(5)	Temperature (Sustained, Controlled)(1)	0	50	ºC
	Temperature (Short Exposure)(2)	-40	70	ºC
	Humidity	Temperature/ RH: 40ºC / 90%		
Ambient, Powered(3)(4)(5)	Temperature, Performance	0	35	ºC
Backside Case Temperature, Powered	Temperature, Performance	0	50	ºC

Notes:

(1) Controlled conditions should be used for long term storage of product

(2) Short exposure represents temporary max limits acceptable for transportation conditions

(3) The camera ambient temperature when powered, 0 ºC to 35 ºC is the validated range in which Intel® qualified the camera. This is a standard range in which Intel® qualifies consumer products. The camera's internal thermal solution was designed to keep the internal components at or below their max powered temperatures. As stated in Table 3-25, the projector temperature and the projector's operation below 60 ºC is critical to the use of the projector for camera operations (use of projector can be determined by application developer based on necessity in usage model).

(4) Ambient means environment while the camera is attached to a tripod using the camera's tripod screw attachment and is not connected to any mechanical or thermal material

(5) Although all Key Performance Indicators (KPIs) are verified before leaving Intel's factory, KPIs may be negatively impacted by extended exposure to excessive temperatures and humidity

3.8.2.2 Depth Camera D400 Series Thermal Solution Guidance

The Intel® RealSense™ Depth Camera D400 Series camera thermal solution was designed taking into account the necessary thermal and mechanical aspects that go into producing a standalone peripheral camera. Those aspects include the temperatures for all of the components associated with the module (projector, vision processor, IMU and camera sensors) when powered.

The Intel® RealSense™ SDK 2.0 (https://github.com/IntelRealSense/librealsense) provides temperature sensor readout based on Intel® RealSense™ camera capabilities. The readout should be used as a reference/guide, but is not to be

used as a replacement for thermal solutions that comply with the temperatures of the camera. If monitoring the temperature of the camera is necessary due to thermal concern, it is recommended to monitor librealsense temperature readout from the application level and act upon the data if within < 5 ºC of the component max temperatures.

To aid in development of thermal solution and heat dissipation, the recommendations below provide some guidance to system integrators.

Passive Cooling Recommendations:

- Mounting Bracket Material – Utilize mounting screws (2X M3 screws) and material that is the same or similar in nature (equal or lower thermal resistance or high conductivity) as the peripheral housing that the D400 Series depth cameras are made from. Material – Aluminum 6000 series.
- Increased Mating Surface – Mounting bracket mating surface with D400 series depth camera can be increased by a factor of 2X. The larger the mounting bracket mating surface area to the depth camera the better.
    - Reduction of mating surface imperfections, defects, roughness and gaps is recommended. Any increase in defects in the material can increase the thermal contact resistance, reducing effectiveness of heat dissipation of the thermal solution. Attachment options should be comprised of epoxy compounds or thermal tape/paste.
- Heat Sink – The addition of a heat sink can also improve heat dissipation from the D400 series depth camera. Use of a material such as Aluminum 6000 series or similar with equal or lower thermal resistance to the mating surface is recommended.

Active Cooling Recommendations:

- While heat pipes and liquid cooling solutions offer advantages, they also increase the complexity of system integration substantially. The use of a fan with direct air flow to the depth camera (back mounting surface 2X M3 screws) is preferable.

3.8.3 Depth Camera D400 Series Product Identifier and Material Code

Table 3-55. Depth Camera D400 Series Product Identifier and Material Code

Production	Product Identifier Code-Manufacture Configuration Code	Product Material Code	IMU Component
Depth Camera D415	J72476-100	961443	N/A
Depth Camera D415 (Multi Pack)	J72476-100	962304	N/A
Depth Camera D435	J72479-100	961448	N/A
Depth Camera D435 (Multi Pack)	J72479-100	962305	N/A

Depth Camera D435i	K38179-100	999AFR	BMI055
Depth Camera D435i	K38179-110	999AFR	BMI085
Depth Camera D435i (Multi Pack)	K38179-100	999AXG	BMI055
Depth Camera D435i (Multi Pack)	K38179-110	999AXG	BMI085
Depth Camera D435f	M31895-100	99ANHK	N/A
Depth Camera D435f (Multi Pack)	M31895-100	99ANHL	N/A
Depth Camera D455	K83122-100	999WCT	BMI055
Depth Camera D455	K83122-110	999WCT	BMI085
Depth Camera D455 (Multi Pack)	K83122-100	999WCR	BMI055
Depth Camera D455 (Multi Pack)	K83122-110	999WCR	BMI085
Depth Camera D405	M31895-100	99ACXC	N/A

3.8.4 Camera Lens Cleaning Procedure

1. Do not use any chemicals or water on the camera lens
2. Remove dust and dirt as much as possible from the lens with a lens blower brush
3. Wipe with a dry, clean micro-fiber cloth

4 Functional Specification

4.1 Vendor Identification (VID) and Device Identification (DID)

Table 4-1. Vendor ID and Device ID Table

Depth Module/Depth Camera	Vendor ID	Device ID
Intel® RealSense™ Depth Module D410	8086	0x0AD2
Intel® RealSense™ Depth Module D415	8086	0x0AD3
Intel® RealSense™ Depth Camera D415	8086	0x0AD3
Intel® RealSense™ Depth Module D430	8086	0x0AD4
Intel® RealSense™ Depth Camera D435	8086	0x0B07
Intel® RealSense™ Depth Camera D435i	8086	0x0B3A
Intel® RealSense™ Depth Module D450	8086	0x0B5C
Intel® RealSense™ Depth Camera D455	8086	0x0B5C
Intel® RealSense™ Depth Module D401	8086	0x0B5B
Intel® RealSense™ Depth Camera D405	8086	0x0B5B
Intel® RealSense™ Depth Camera D435f	8086	0x0B07

4.2 Vision Processor D4 Data Streams

The Intel® RealSense™ Vision Processor D4 depth imaging system provides high quality depth data to a host system. The depth data is generated via stereo vision technology, which is optionally assisted by an infrared projector. The imaging system has the ability to syncronize its depth data stream with its color data stream.

Table 4-2. Image Formats (USB 3.1 Gen 1) – D410/D415/D430/D435/D435i/D435f

Format	Resolution	Frame Rate (FPS)	Comment
Z [16 bits]	1280 x 720	6, 15, 30	Depth
	848 x 480	6, 15, 30, 60, 90	
	640 x 480	6, 15, 30, 60, 90	
	640 x 360	6, 15, 30, 60, 90	

Format	Resolution	Frame Rate (FPS)	Comment
	480 x 270	6, 15, 30, 60, 90	
	424 x 240	6, 15, 30, 60, 90	
Y8 [8 bits]	1280 x 720	6, 15, 30	Luminance Left and Right Imager
	848 x 480	6, 15, 30, 60, 90	
	640 x 480	6, 15, 30, 60, 90	
	640 x 360	6, 15, 30, 60, 90	
	480 x 270	6, 15, 30, 60, 90	
	424 x 240	6, 15, 30, 60, 90	
UYVY [16 bits]	1280 x 720	6, 15, 30	Color Stream from Left Imager (D410 & D415)
	848 x 480	6, 15, 30, 60, 90	
	640 x 480	6, 15, 30, 60, 90	
	640 x 360	6, 15, 30, 60, 90	
	480 x 270	6, 15, 30, 60, 90	
	424 x 240	6, 15, 30, 60, 90	
YUY2 [16 bits]	1920 x 1080	6, 15, 30	Color Stream from RGB camera (Camera D415 & D435/D435i/D435f)
	1280 x 720	6, 15, 30	
	960 x 540	6, 15, 30, 60	
	848 x 480	6, 15, 30, 60	
	640 x 480	6, 15, 30, 60	
	640 x 360	6, 15, 30, 60	
	424 x 240	6, 15, 30, 60	
	320 x 240	6, 30, 60	
	320 x 180	6, 30, 60	
Calibration [24 bits]	1920x1080	15, 25	D410/D415
	1280 x 800	15, 25	D430/D435/D435i/D435f
Intel® RealSense™ Self-Calibration	256 x 144	90	Intel® RealSense™ Self-Calibration and Tare format (D400 Series)

Notes:

1. Depth and Color are mapped as separated interfaces. Each one of the interfaces operates independently of the other interface (Virtual channel in MIPI and End Point in USB).
2. To ensure proper USB 3.1 device enumeration, connect the cable to the D400 camera first, then insert it into the host system port
3. For information regarding USB interoperability, refer to whitepaper "USB Interoperability Testing for Intel® RealSense™ Cameras" - https://www.intelrealsense.com/usb-interoperability-testing-for-intel-realsense-cameras

Table 4-3. Image Formats (USB 3.1 Gen 1) – D450/D455

Format	Resolution	Frame Rate (FPS)	Comment
Z [16 bits]	1280 x 720	5, 15, 30	Depth
	848 x 480	5, 15, 30, 60, 90	
	640 x 480	5, 15, 30, 60, 90	
	640 x 360	5, 15, 30, 60, 90	
	480 x 270	5, 15, 30, 60, 90	
	424 x 240	5, 15, 30, 60, 90	
Y8 [8 bits]	1280 x 720	5, 15, 30	Luminance Left and Right Imager
	848 x 480	5, 15, 30, 60, 90	
	640 x 480	5, 15, 30, 60, 90	
	640 x 360	5, 15, 30, 60, 90	
	480 x 270	5, 15, 30, 60, 90	
	424 x 240	5, 15, 30, 60, 90	
UYVY [16 bits]	1280 x 720	5, 15, 30	Color Stream from Left Imager
	848 x 480	5, 15, 30, 60, 90	
	640 x 480	5, 15, 30, 60, 90	
	640 x 360	5, 15, 30, 60, 90	
	480 x 270	5, 15, 30, 60, 90	
	424 x 240	5, 15, 30, 60, 90	
YUY2 [16 bits]	1280 x 800	5, 15, 30	Color Stream from RGB camera Calibration uses 1280 x 720 at 15 or 30 FPS
	848 x 480	5, 15, 30, 60	
	640 x 480	5, 15, 30, 60	
	640 x 360	5, 15, 30, 60, 90	
	480 x 270	5, 15, 30, 60, 90	
	424 x 240	5, 15, 30, 60, 90	
Calibration IR Imager Y12I [24 bits]	1280 x 800	15, 25	
Intel® RealSense™ Self-Calibration	256 x 144	90	Intel® RealSense™ Self-Calibration and Tare format

Notes:

1. Depth and Color are mapped as separated interfaces. Each one of the interfaces operates independently of the other interface (Virtual channel in MIPI and End Point in USB).
2. To ensure proper USB 3.1 device enumeration, connect cable to D400 camera first, then insert into host system port

3. For information regarding USB interoperability, refer to whitepaper "USB Interoperability Testing for Intel® RealSense™ Cameras" - https://www.intelrealsense.com/usb-interoperability-testing-for-intel-realsense-cameras

Table 4-4. Image Formats (USB 3.1 Gen1) – D401/D405

Format	Resolution	Frame Rate (FPS)	Comment
Z [16 bits]	1280 x 720	5, 15, 30	Depth
	848 x 480	5, 15, 30, 60, 90	
	640 x 360	5, 15, 30, 60, 90	
	480 x 270	5, 15, 30, 60, 90	
	424 x 240	5, 15, 30, 60, 90	
Y8 [8 bits]	1280 x 720	5, 15, 30	Luminance Left or Right Imager
	848 x 480	5, 15, 30, 60, 90	
	640 x 360	5, 15, 30, 60, 90	
	480 x 270	5, 15, 30, 60, 90	
	424 x 240	5, 15, 30, 60, 90	
L8R8 [16 bits]	1280 x 720	5, 15, 30	Luminance Left and Right Imager
	848 x 480	5, 15, 30, 60, 90	
	640 x 360	5, 15, 30, 60, 90	
	480 x 270	5, 15, 30, 60, 90	
	424 x 240	5, 15, 30, 60, 90	
UYVY [16 bits]	1280 x 720	5, 15, 30	Color Stream from Left Imager
	848 x 480	5, 15, 30, 60, 90	
	640 x 360	5, 15, 30, 60, 90	
	480 x 270	5, 15, 30, 60, 90	
	424 x 240	5, 15, 30, 60, 90	
YUY2 [16 bits]	1280 x 720	5, 15, 30	Color Stream from Left RGB via ISP
	848 x 480	5, 15, 30, 60, 90	
	640 x 360	5, 15, 30, 60, 90	
	480 x 270	5, 15, 30, 60, 90	
	424 x 240	5, 15, 30, 60, 90	
Calibration L+R imager Y12I [24 bits]	1288 x 808	15, 25	D401, D405
OC Calibration	256 x 144	90	On Chip and Tare calibration format, all cameras/modules

Notes:

1. Depth and Color are mapped to the same UVC interface

2. To ensure proper USB 3.1 device enumeration, connect cable to D400 camera first, then insert into host system port
3. For information regarding USB interoperability, refer to whitepaper "USB Interoperability Testing for Intel® RealSense™ Cameras" - https://www.intelrealsense.com/usb-interoperability-testing-for-intel-realsense-cameras

Table 4-5. Simultaneous Image Streams (USB 3.1 Gen 1) – D410/D415/D430/D435/D435i/D435f/D450/D455

Depth	Imager	Color (Left Imager) D410	Color (RGB Camera) D415/D435/D435i/ D435f/D450/D455	IMU D435i/D455	Comment
Z16	Y8			Gyro & Accelerometer	
Z16		UYVY		Gyro & Accelerometer	
Z16	Y8		YUY2	Gyro & Accelerometer	
Z16			YUY2	Gyro & Accelerometer	

Notes:

1. RGB to depth hardware sync is only supported with the same frame rate for all streams
2. For simultaneous Depth and RGB streaming, it is recommended to set color resolution to same value (or higher) as depth resolution
3. USB 3.1 Gen 1 supports all resolution/frame rate combinations in a typical dedicated USB port configuration. When sharing a USB hub with other devices (e.g., additional RealSense cameras), considerations regarding bandwidth requirements have to be taken into account.
4. To ensure proper USB 3.1 device enumeration, connect the cable to the D400 camera first, then insert it into the host system port
5. Streaming of Depth, IR left and IR right concurrently is only supported for calibration in a dedicated format with rectified IR (24-bit), as seen in the section 4.2
6. For information regarding USB interoperability, refer to whitepaper "USB Interoperability Testing for Intel® RealSense™ Cameras" - https://www.intelrealsense.com/usb-interoperability-testing-for-intel-realsense-cameras

Table 4-6. Simultaneous Image Streams (USB 3.1 Gen 1) – D401/D405

Depth	Imager	Color (Left Imager) D401/D405	Comment
Z16	Y8		
Z16	Y8	YUY2	

Notes:

1. USB 3.1 Gen 1 supports all resolution/frame rate combinations in a typical dedicated USB port configuration. When sharing a USB hub with other devices (e.g., additional RealSense cameras), considerations regarding bandwidth requirements must be taken into account.
2. To ensure proper USB 3.1 device enumeration, connect cable to D400 camera first, then insert into host system port
3. For information regarding USB interoperability, refer to whitepaper "USB Interoperability Testing for Intel® RealSense™ Cameras" - https://www.intelrealsense.com/usb-interoperability-testing-for-intel-realsense-cameras

Table 4-7. Image Formats (USB 2.0) – D410/D415/D430/D435/D435i/D435f

Format	Resolution	Frame Rate	Comment
Z [16 bits]	1280 x 720	6	Depth
	848 x 480	6, 10	
	640 x 480	6, 15, 30	
	640 x 360	30	
	480 x 270	6, 15, 30, 60	
Y8 [8 bits]	1280 x 720	6	Luminance Stream from Left Imager
	848 x 480	6, 10	
	640 x 480	6, 15, 30	
	480 x 270	6, 15, 30, 60	
UYVY [16 bits]	1280 x 720	6	Color Stream from Left Imager (D410 & D415)
	640 x 480	6, 15, 30	
	480 x 270	6, 15, 30, 60	
YUY2 [16 bits]	1280 x 720	6, 15	Color Stream from RGB camera (Camera D415 & D435/D435i/D435f)
	640 x 480	6, 15, 30	
	424 x 240	6, 15, 30, 60	
Intel® RealSense™ Self-Calibration	256 x 144	90	Intel® RealSense™ Self-Calibration and Tare format

Note:

1. Depth and Color are mapped as separated interfaces. Each one of the interfaces is working independently of the other interface (Virtual channel in MIPI and End Point in USB). Right infrared imager stream is supported for calibration purposes only.

Table 4-8. Image Formats (USB 2.0) – D450/D455

Format	Resolution	Frame Rate	Comment
Z [16 bits]	1280 x 720	5	Depth
	848 x 480	5, 10	
	640 x 480	5, 15, 30	
	640 x 360	30	

Format	Resolution	Frame Rate	Comment
	480 x 270	5, 15, 30, 60	
Y8 [8 bits]	1280 x 720	5	Luminance Stream from Left Imager
	848 x 480	5, 10	
	640 x 480	5, 15, 30	
	640 x 360	30	
	480 x 270	5, 15, 30, 60	
UYVY [16 bits]	1280 x 720	5	Color Stream from Left Imager
	848 x 480	5, 10	
	640 x 480	5, 15, 30	
	640 x 360	30	
	480 x 270	5, 15, 30, 60	
YUY2 [16 bits]	1280 x 800	15	Color Stream from RGB camera
	1280 x 720	5, 10, 15	
	640 x 480	5, 15, 30	
	424 x 240	5, 15, 30, 60	
Intel® RealSense™ Self-Calibration	256 x 144	90	Intel® RealSense™ Self-Calibration and Tare format

Table 4-9. Image Formats (USB 2.0) – D405

Format	Resolution	Frame Rate	Comment
Z [16 bits]	1280 x 720	5	Depth
	848 x 480	5, 10	
	640 x 480	5, 15, 30	
	640 x 360	30	
	480 x 270	5, 15, 30, 60	
Y8 [8 bits]	1280 x 720	5	Luminance Stream from Left Imager
	848 x 480	5, 10	
	640 x 480	5, 15, 30	
	640 x 360	30	
	480 x 270	5, 15, 30, 60	
UYVY [16 bits]	1280 x 720	5	Color Stream from Left Imager
	848 x 480	5, 10	
	640 x 480	5, 15, 30	
	640 x 360	30	
	480 x 270	5, 15, 30, 60	

Format	Resolution	Frame Rate	Comment
YUY2 [16 bits]	1280 x 720	5, 10, 15	Color Stream from RGB + ISP
	848 x 480	5, 10	
	640 x 480	5, 15, 30	
	480 x 270	5, 15, 30	
	424 x 240	5, 15, 30, 60	
Intel® RealSense™ Self-Calibration	256 x 144	90	Intel® RealSense™ Self-Calibration and Tare format

Table 4-10. Simultaneous Image Streams (USB 2.0)

Depth	Imager	Color (Left Imager) D410	Color (RGB Camera) D415/D435/D435i/D450/D455	IMU D435i/D455	Comment
Z16	Y8			Gyro & Accelerometer	
Z16		UYVY		Gyro & Accelerometer	
Z16	Y8		YUY2	Gyro & Accelerometer	
Z16			YUY2	Gyro & Accelerometer	

Notes:

1. RGB to depth hardware sync is only supported with the same frame rate for all streams
2. For simultaneous Depth and RGB streaming, it is recommended to set the color resolution to the same value (or higher) as the depth resolution
3. USB 2.0 supports a subset of the possible resolution/frame rate combinations due to the bandwidth requirements. Maximum simultaneous stream configurations are:
    a. Depth: 640 x 480 @ 15FPS; Imager: 640 x 480 @ 15FPS; RGB Camera: 640 x 480 @ 30FPS
    b. Depth: 480 x 270 @ 60FPS; Imager: 480 x 270 @ 60FPS; RGB Camera: 424 x 240 @ 30FPS
    c. Depth: 848 x 480; Imager: 848x480; RGB Camera: 1280 x 720 @ 10FPS

4.3 Depth Field of View (FOV)

The depth field of view is the shared overlap of the individual left and right imagers' fields of view for which Vision Processor D4 provides depth data.

The FOV changes based on the resolution and aspect ratio. HD resolution's aspect ratio is 16:9, while VGA resolution's aspect ratio is 4:3. Review "Table 3-11. Stereo Depth Module SKU Properties" and "Table 3-48. Depth SKU Properties" to obtain the FOV values associated with each camera SKU.

4.4 Depth Field of View at Distance (Z)

Depth Field of View (Depth FOV) at any distance (Z) can be calculated using the following equation:

$$\text{Depth FOV} = \frac{\text{HFOV}}{2} + \tan^{-1}\{\tan\left(\frac{\text{HFOV}}{2}\right) - \text{B/Z}\}$$

Definitions:

1. Depth FOV = Depth Field of View
2. HFOV = Horizontal Field of View of left imager on depth module
3. B = Baseline
4. Z = Distance of scene from depth module

Figure 4-1. Depth Field of View to Depth Map illustration

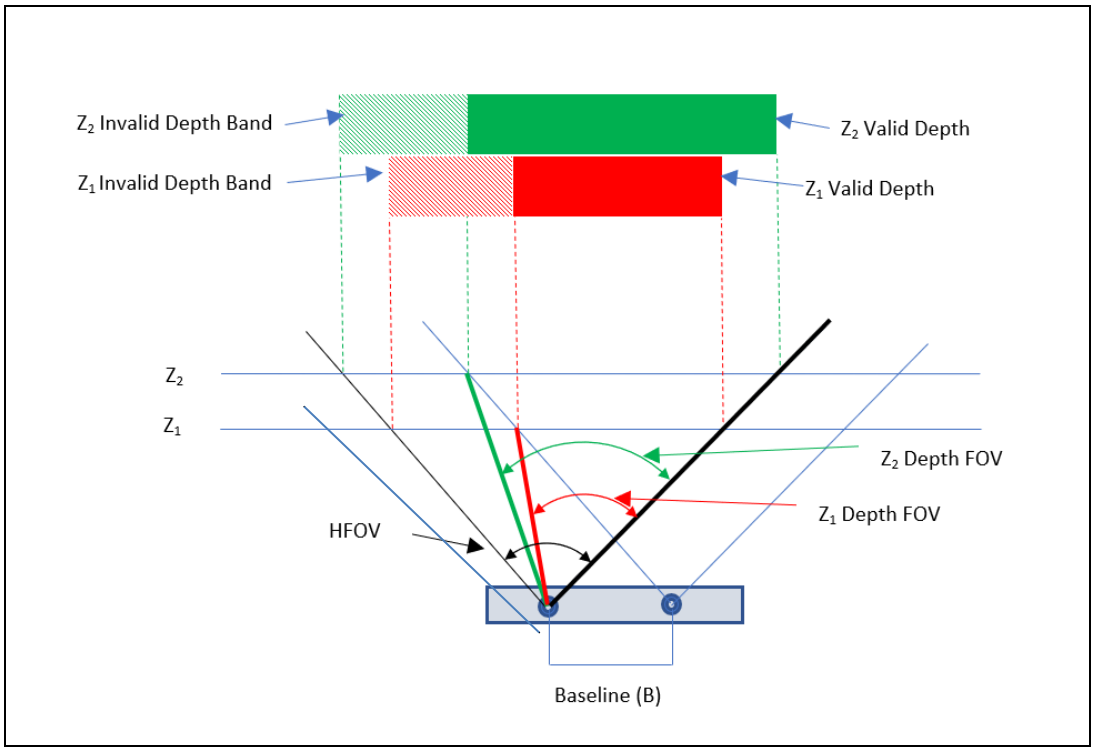

Note:

1. As the scene's distance from the depth module increases, the invalid depth band decreases in the overall depth image. Overall depth image is invalid depth band plus valid depth map.

4.5 Invalid Depth Band

The depth data generated by the D4 Vision Processor utilizes the left imager as the reference for the stereo matching algorithm, resulting in a non-overlapped region in the camera's field of view. This non-overlapped region (at the left edge of the frame) contains no depth data. The invalid depth data band decreases as the distance from the camera/module to the scene increases.

Figure 4-2. Left Invalid Depth Band

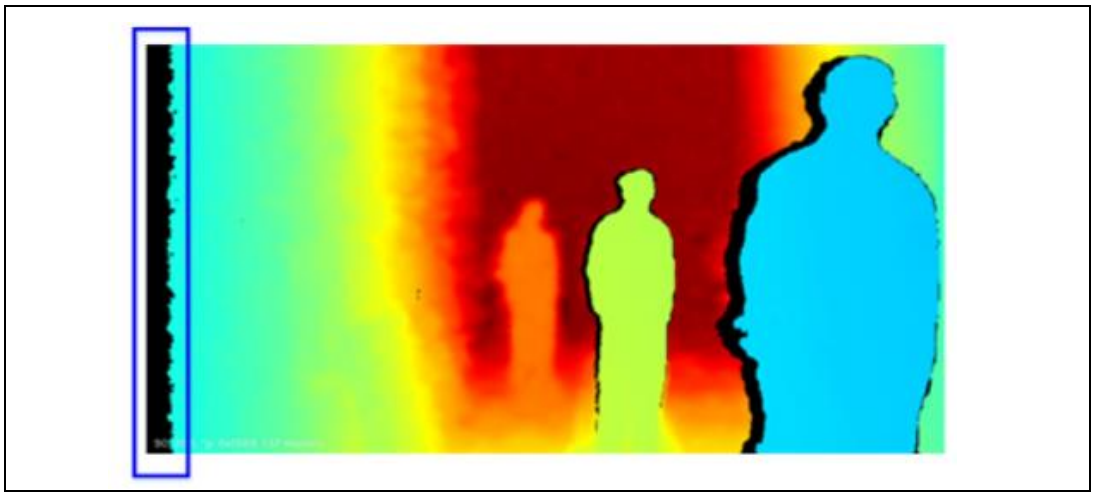

The width of the invalid depth band can be calculated using the following equations:

In terms of horizontal FOV:

$$\text{DBR (Ratio of Invalid Depth Band to Total Horizontal Image)} = B/(2 * Z * \tan(\frac{HFOV}{2}))$$

$$\text{Invalid Depth Band (in Pixels)} = HRES * DBR$$

In terms of focal length:

$$\text{DBR (Ratio of Invalid Depth Band to Total Horizontal Image)} = B * F/(Z * HRES)$$

$$\text{Invalid Depth Band (in Pixels)} = B * F/Z$$

Definitions:

1. B = Baseline
2. Z = Distance of scene from depth module
3. F = Focal length

4. HFOV = Horizontal Field of View of left imager on depth module

5. HRES = Horizontal Resolution

Note that the equations above are valid for a base configuration of camera settings. The default camera configuration in firmware may have settings optimized for depth performance that impact the actual width of the invalid depth band, as compared to the calculated width of the invalid depth band from the equations.

4.6 Minimum-Z Depth

The Minimum-Z Depth is the minimum distance from the depth camera/module to the scene for which the Vision Processor D4 provides depth data.

Table 4-11. Minimum-Z Depth

Resolution	D410/ D415	D430/D435/ D435i/D435f	D450/D455	D401/D405
	Min-Z (mm)	Min-Z (mm)	Min-Z (mm)	Min-Z (mm)
1280x720	450	280	520	100
848X480	310	195	350	70
640x480	310	175	320	-
640x360	240	150	260	55
480x270	180	120	200	45
424x240	160	105	180	40

4.7 Depth Quality Specification

A set of standard metrics based on accuracy, data validity, and temporal stability are used to quantify the depth quality.

Although the modules are designed for a specific depth FOV, the measurements are taken within 80% of this FOV, defined as the Region Of Interest (ROI). This ROI aligns with the practical usage area and the module's qualified optical parameters.

Table 4-12. Depth Quality Metric

Metric	Definition(1)
Depth Accuracy	Measures the difference for valid pixels relative to a ground truth surface
Fill Rate	Percentage of pixels that have valid depth values
Depth Standard Deviation	Measures total spatial noise for each valid pixel relative to a best fit plane
Pixel Temporal Noise	Measures total temporal noise for each valid pixel relative to a best fit plane

Note:
(1) Each measurement is taken from a predefined region of interest (ROI) which is within 80% of the depth field of view (FOV)

Table 4-13. Depth Quality Metric Illustration

Depth Accuracy and Depth RMS Error	Fill Rate
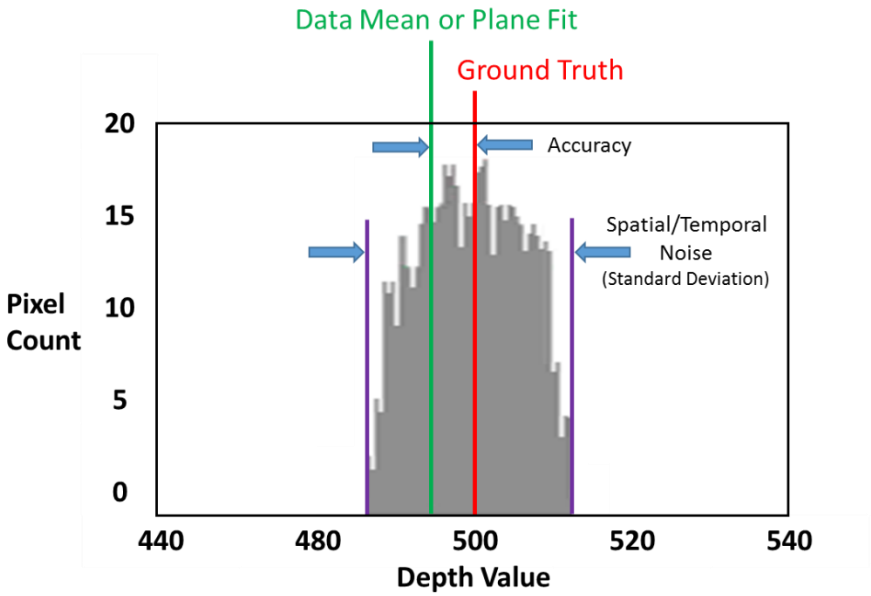	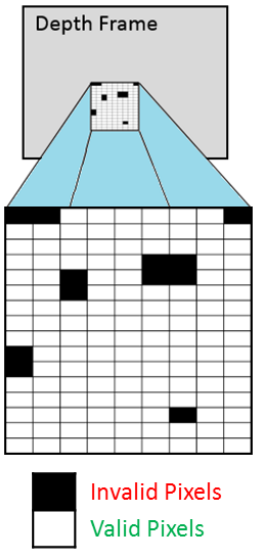

Table 4-14. Depth Quality Specification

Metric	D410/D415 (<= 2 Meters and 80% ROI, HD Resolution)	D430/D435/ D435i/D435f (<= 2 Meters and 80% ROI, HD Resolution)	D450/D455 (<= 4 Meters and 80% ROI, HD Resolution)	D401/D405 (<= 0.5 Meters and 80% ROI, HD Resolution)
Z-accuracy (or Absolute Error)	± 2%	± 2%	± 2%	± 2%
Fill rate	≥ 99%	≥ 99%	≥ 99%	≥ 99.5%
RMS Error (or Spatial Noise)	≤ 2%	≤ 2%	≤ 2%	≤ 1%
Temporal Noise	≤ 1%	≤ 1%	≤ 1%	≤ 0.5%
Lifetime	4 years	5 years	5 years	5 years

Notes:

1. Key Performance Indicators (KPIs) are validated at the factory and reflect typical conditions
2. KPIs could be impacted by environmental factors over the camera/module's lifetime
3. Please follow best-known methods to obtain optimal camera/module performance over its lifetime. Refer to white paper "Intel® RealSense™ Stereo Camera Best Known Methods to Get Optimal Camera Performance over Lifetime" -

https://www.intelrealsense.com/best-known-methods-for-optimal-camera-performance-over-lifetime

4. For Depth Quality metric definitions and test methodology, refer to white paper "Intel® RealSense™ Camera Depth Testing Methodology"

5. Laser Power:

    a. D410/D415/D430/D435/D435i/D435f – 150 mW, Exposure: Auto Exposure

    b. D450/D455 – 360 mW, Exposure: Auto Exposure

6. Lifetime: operating in default settings within the supported temperature for up to 16 hours a day [66%]

4.8 Depth Start Point (Ground Zero Reference)

The depth start point or the ground zero reference can be described as the starting point or plane where depth = 0. For depth modules (D410 & D415), this point is referenced from front of lens or from backside of module. For depth cameras (D415, D435/D435i/D435f, D455), this point is referenced from front of the camera cover glass.

Figure 4-3. Depth Module Depth Start Point Reference

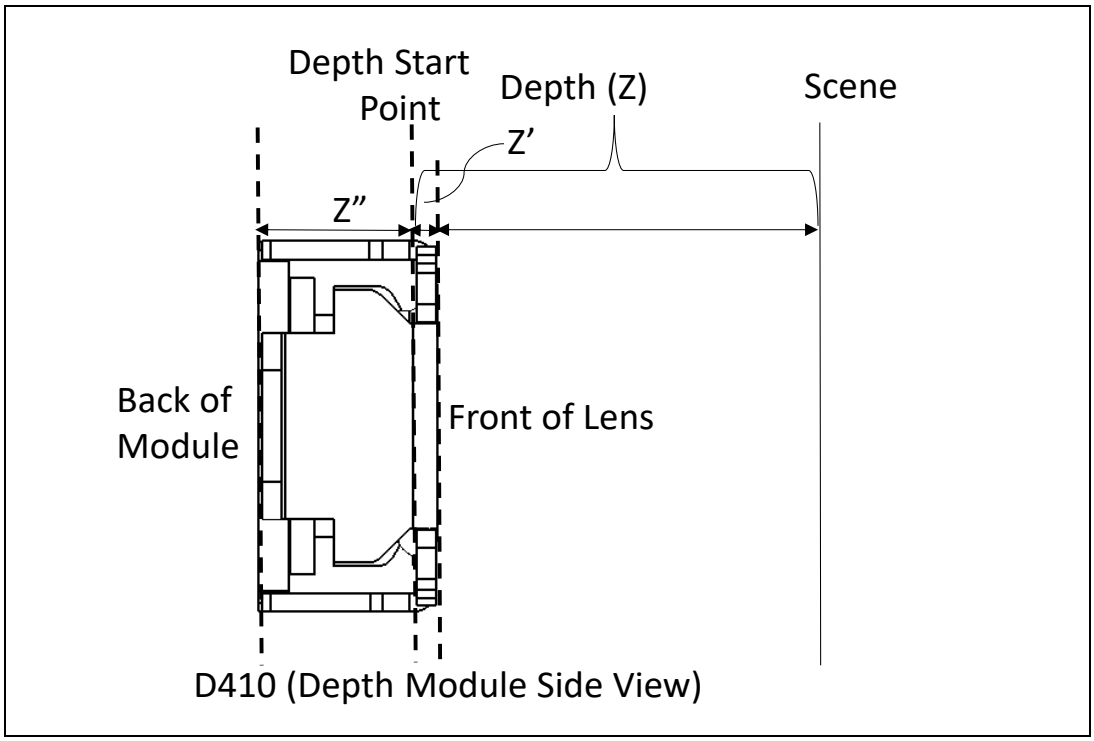

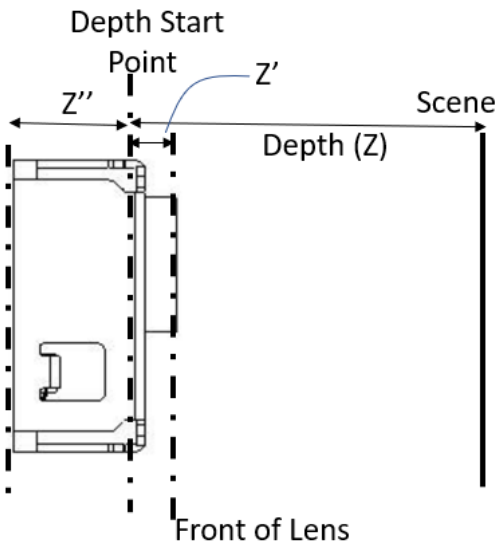

D401 (Depth Module Side View)

Table 4-15. Depth Module Depth Start Point

Depth Module	Front of Lens (Z')	Back of Module (Z")
D410/D415	-0.1 mm	4.3 mm
D430/D450	-3.2 mm	7.5 mm
D401	-2.7 mm	7.8 mm

Note:

1. If depth measurement reference is front of lens, then |Z'| should be added to measured value to determine Ground Truth. If depth measurement reference is back of module, then |Z"| should be subtracted to determine Ground Truth.

Figure 4-4. Depth Camera Depth Start Point Reference

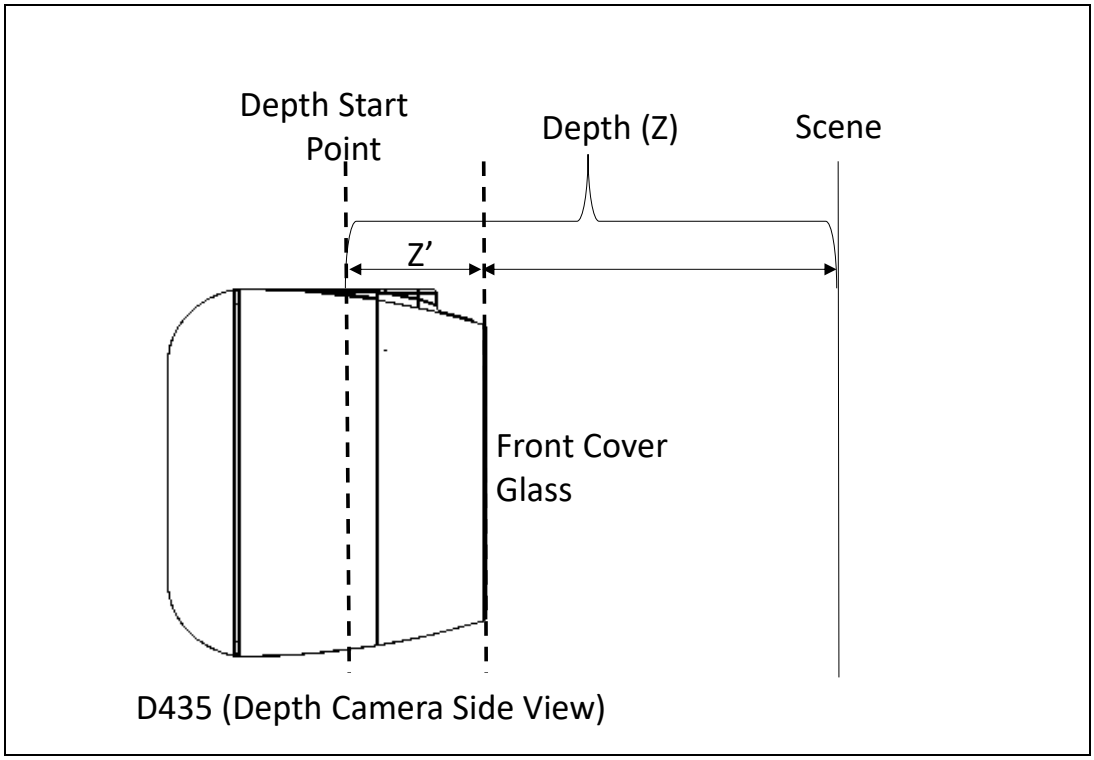

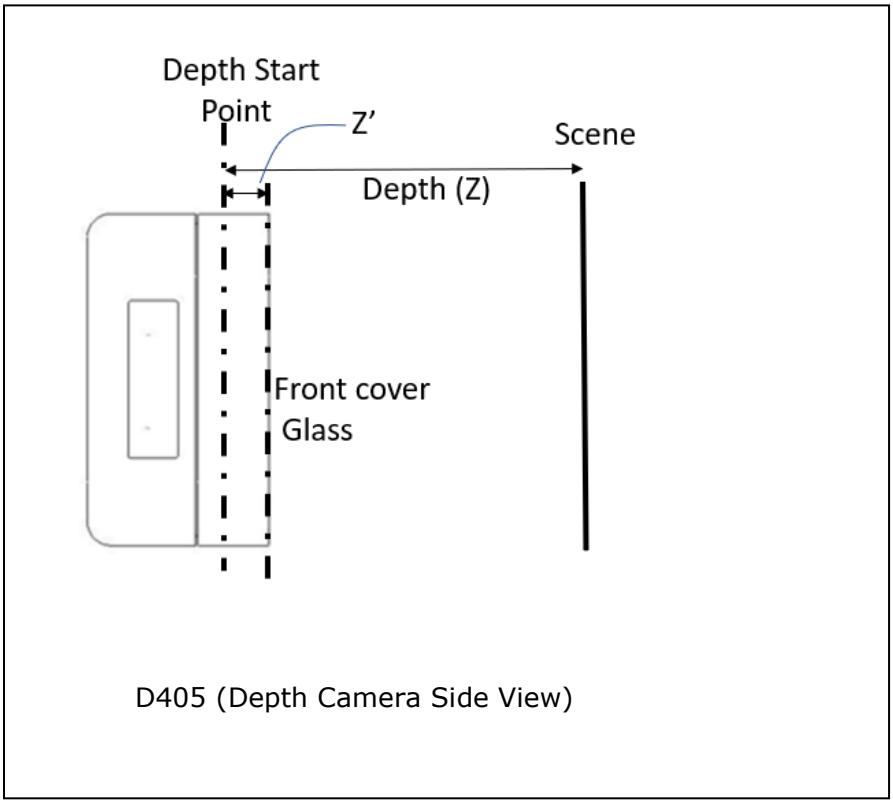

Table 4-16. Depth Cameras Depth Start Point

Depth Camera	Camera Front Glass (Z')
D415	-1.1 mm
D435/D435i	-4.2 mm
D435f	-4.7 mm
D455	-4.55 mm
D405	-3.7 mm

Note:

1. If depth measurement reference is front cover glass, then |Z'| should be added to measured value to determine Ground Truth

4.8.1 Depth Origin X-Y Coordinates

The depth origin X-Y coordinates are the X-Y center of the left imager.

Figure 4-5. Depth Module X-Y Depth Origin Reference – D410, D415, D430, D450

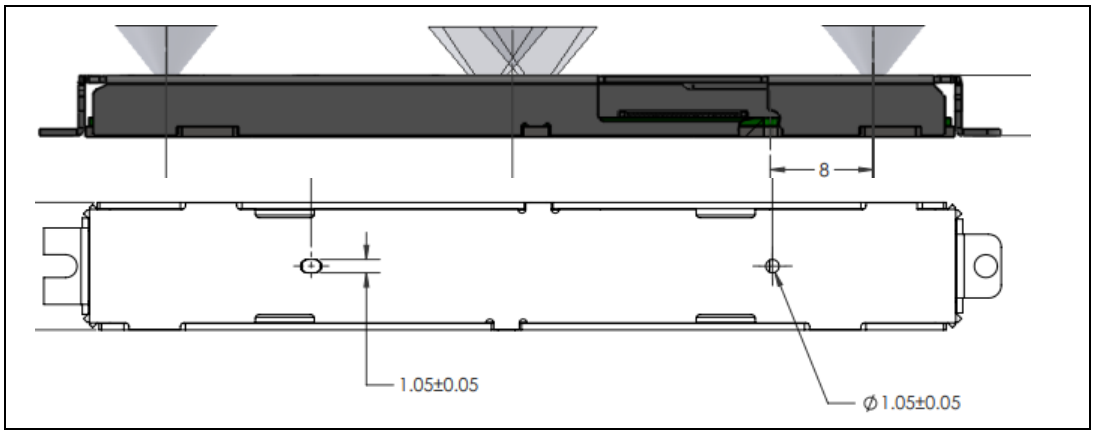

Table 4-17. Depth Module X-Y Depth Origin Coordinates

Depth Module	Left Alignment Hole[1] to Left Imager Center
D410	8 mm
D415	8 mm
D430	8 mm
D450	12.2 mm

Notes:

1. Left alignment hole on bottom stiffener of depth module
2. Left alignment hole and left imager center is on depth module centerline

Figure 4-6. Depth Module X-Y Depth Origin Reference – D401

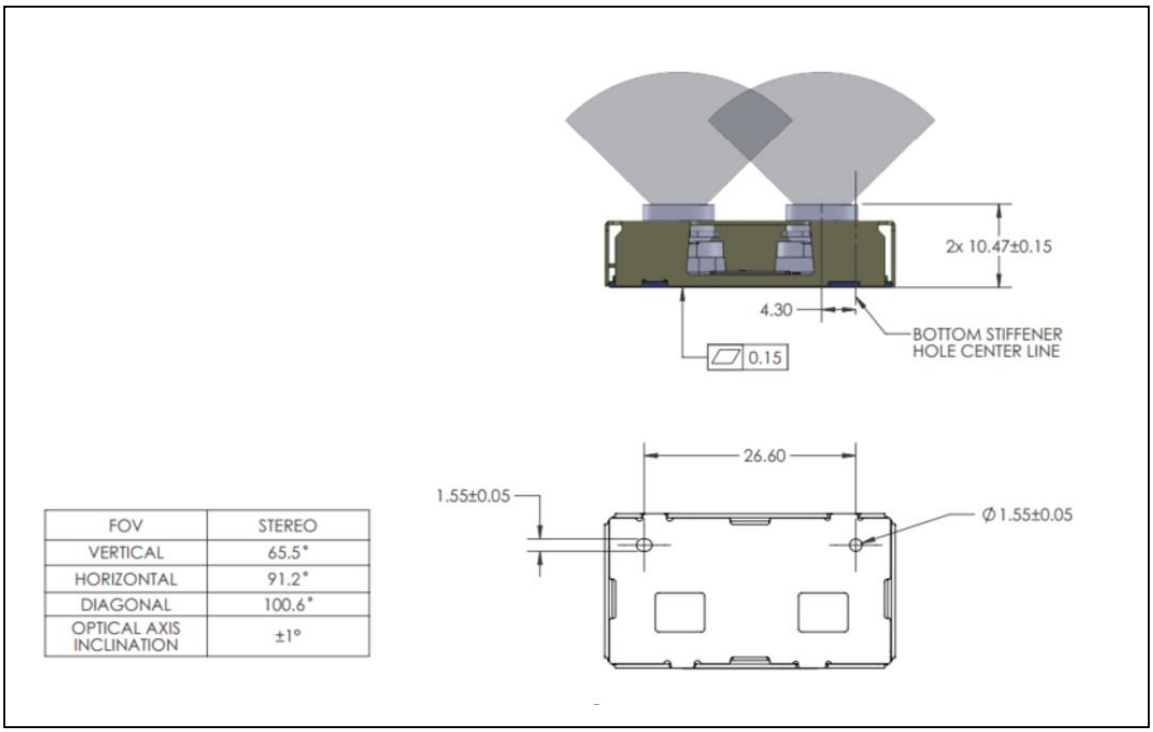

Table 4-18. Depth Module X-Y Depth Origin Coordinates – D401

Depth Module	Left Alignment Hole(1,2) to Left Imager Center(2)
D401	X - 4.3 mm, Y - 8.5 mm

Notes:

(1) Left alignment hole on bottom stiffener of depth module
(2) Left alignment hole and left imager center is on depth module centerline

Figure 4-7. Depth Camera X-Y Depth Origin Reference – D415, D435/D435i/D435f, D455

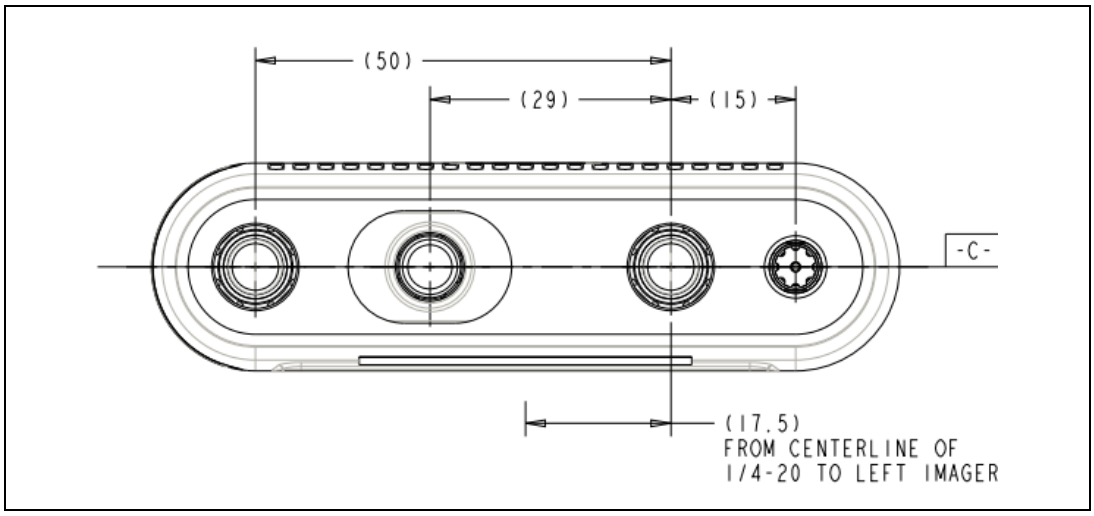

Table 4-19. Depth Camera X-Y Depth Origin Coordinates

Depth Camera	From Centerline of ¼-20[1] To Left Imager
D415	20 mm
D435/D435i/D435f	17.5 mm
D455	47.5 mm

Note:

(1) Center of tripod mounting hole (1/4-20)

Figure 4-8. Depth Camera X-Y Depth Origin Reference – D405

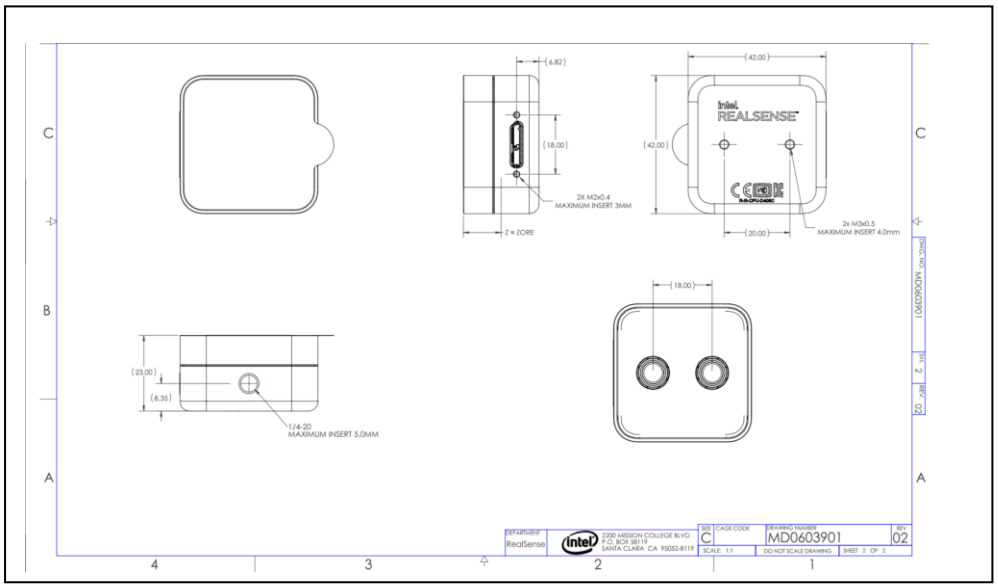

Table 4-20. Depth Camera X-Y Depth Origin Coordinates – D405

Depth Camera	From Centerline of ¼-20[1] To Left Imager
D405	9 mm

Note:

(1) Center of tripod mounting hole (1/4-20)

4.9 Depth Camera Functions

D4 exposes the following Depth image settings.

Table 4-21. Depth Camera Controls

Control	Description	Min	Max
Manual Exposure[1] (ms)	Control sensor exposure period (400/410)	1	166
Manual Exposure[1] (ms)	Control sensor exposure period (430)	1	166
Manual Gain[1] (Gain 1.0 = 16)	Control sensor digital gain	16	248
Laser Power (On/Off) (On = 1)	Power to IR Projector	0	1
Manual Laser Power (mW)	Laser Power setting (30 mW steps)	0	360

Control	Description	Min	Max
Auto Exposure Mode (Enable = 1)	Auto Exposure Mode. When Auto Exposure is enabled, Exposure and Gain are set based on the environment condition.	0	1
Auto Exposure ROI	Perform Auto Exposure on a selected ROI	T-0 L-0 B-1 R-1	T-719 L-1279 B-720 R-1280
Preset	Set Controls parameters based on Camera Usage		
Meta Data Control	Enable/Disable Metadata	0	1

Note:

(1) Not supported in Auto Exposure Mode

Definitions:

- T = Top, L = Left, B = Bottom, R = Right

4.10 Color Camera Functions

Table 4-22. RGB Exposed Controls

Control	Description	Min	Max
Auto-Exposure Mode	Automatically sets the exposure time and gain for the frame	0x1	0x8
Auto Exposure ROI	Perform Auto Exposure on a selected ROI	T-0 L-0 B-1 R-1	T-1079 L-1919 B-1080 R-1920
Manual Exposure Time	Sets the absolute exposure time when auto-exposure is disabled	1	10000
Brightness	Sets the amount of brightness applied when auto-exposure is enabled	-64	64
Contrast	Sets the amount of contrast based on the brightness of the scene	0	100
Gain	Sets the amount of gain applied to the frame if auto-exposure is disabled	0	128
Hue	Sets the amount of hue adjustment applied to the frame	-180	180
Saturation	Sets the amount of saturation adjustment applied to the frame	0	100

Control	Description	Min	Max
Sharpness	Sets the amount of sharpening adjustment applied to the frame	0	100
Gamma	Sets amount of gamma correction applied to the frame	100	500
White Balance Temperature Control	Sets the white balance when AWB is disabled	2800	6500
White Balance Temperature Auto (AWB)	Enables or disables the AWB algorithm	0	1
Power Line Frequency	Specified based on the local power line frequency for flicker avoidance	0	3
Backlight Compensation	Sets a weighting amount based on brightness to the frame	0	1
Low Light Comp	Low Light Compensation	0	1

Definitions:

- T = Top, L = Left, B = Bottom, R = Right

4.11 IMU Specifications

Table 4-23. IMU Specifications – BMI055

Camera	Parameter	Properties
Intel® RealSense™ Depth Camera D435i, Intel® RealSense™ Depth Camera D455	Degrees of Freedom	6
	Acceleration Range	± 4 g
Intel® RealSense™ Depth Module D430+Intel® RealSense™ Vision Processor D4 Board V2(3)	Accelerometer Sample Rate(1)	62.5, 250 (Hz)
	Gyroscope Range	± 1000 deg/s
Intel® RealSense™ Depth Module D450+Intel® RealSense™ Vision Processor D4 Board V3	Gyroscope Sample Rate(2)	200, 400 (Hz)
	Sample Timestamp Accuracy	50 µsec

Notes:

(1) The sample rate may differ from the absolute specified sample rate by ± 5%. It is advisable to rely on the sample timestamp.

(2) The sample rate may differ from the absolute specified sample rate by ± 0.3%

(3) Intel® RealSense™ Depth Module D430 + Intel® RealSense™ Vision Processor D4 Board V2 and V3 with the BMI055 IMU are no longer available. The BMI085 IMU replaced the BMI055. See PCN #118035 – 00 and Table 4-24 below.

Table 4-24. IMU Specifications – BMI085

Camera	Parameter	Properties
	Degrees of Freedom	6

Camera	Parameter	Properties
Intel® RealSense™ Depth Camera D435i, Intel® RealSense™ Depth Camera D455 Intel® RealSense™ Depth Module D450+Intel® RealSense™ Vision Processor D4 Board V3	Acceleration Range	±4 g
	Accelerometer Sample Rate(1)	100, 200 (Hz)
	Gyroscope Range	±1000 deg/s
	Gyroscope Sample Rate(2)	200, 400 (Hz)
	Sample Timestamp Accuracy	50 µsec

Notes:

(1) The sample rate may differ from the absolute specified sample rate by ± 5%. It is advisable to rely on the sample timestamp.

(2) The sample rate may differ from the absolute specified sample rate by ± 0.3%

5 Firmware

The firmware contains the Vision Processor D4's operating instructions. Upon bootup, Vision Processor D4 loads the firmware and programs the components' registers. If the Vision Processor D4 is configured for update or recovery, the unlocked R/W region of the firmware can be changed.

5.1 Update

During a firmware update, the firmware utility will issue a device firmware update command to the Vision Processor D4. The Vision Processor D4 will then reset into firmware update mode. The firmware utility uses a single binary file to maintain the firmware image. The firmware utility compares the firmware version installed on the camera to the firmware version file to be updated. Based on the comparison, the firmware utility will downgrade, upgrade, or skip if the versions match.

5.1.1 Update Limits

The firmware update engine does not allow infinite update cycles between older and current versions of firmware. The engine will establish a baseline version of firmware based on the latest firmware version installed. The engine will allow a return to a previous version or baseline version of firmware up to 20 times. After the 20th update, the engine will only allow an update to a firmware revision higher than the baseline version.

5.2 Recovery

A read-only boot sector is built into firmware which enables basic operation regardless of the integrity of the operating instructions region. This ensures that the imaging system can still function if the update fails or is corrupted. When firmware recovery is required, the firmware utility will communicate with the recovery driver to set the DFU pin low and reset the imaging system to recovery mode.

Firmware Recovery can also be externally triggered via a controllable interrupt connected to the Vision Processor D4 DFU (Device Firmware Update) pin.

The firmware recovery sequence will be triggered by the firmware client utility. This client utility will communicate through ACPI _DSM to trigger the controllable interrupt (GPIO) at the appropriate times. The firmware recovery requires an ACPI _DSM interface to control the interrupt GPIO in configuring to firmware recovery state. The ACPI_DSM methods and BIOS use the Write to GPIO functions to set the controllable interrupt.

6 Software

6.1 Intel® RealSense™ Software Development Kit 2.0

Intel® RealSense™ SDK 2.0 is a cross-platform library for working with Intel® RealSense™ D400 Series cameras. It is open source and available on https://github.com/IntelRealSense/librealsense

The SDK includes:

- **Intel® RealSense™ Viewer** - This application can be used view, record, and play back depth streams, set camera configurations, and adjust other controls.
- **Depth Quality Tool** - This application can be used to test depth quality, including: distance to plane accuracy, Z accuracy, standard deviation of the Z accuracy and fill rate.
- **Debug Tools** - These command line tools gather data and generate logs to assist in debug of the camera.
- **Code Examples** - Examples to demonstrate the use of SDK and to enable inclusion of D400 Series camera code snippets into applications.
- **Wrappers** -Software wrappers supporting common programming languages and environments such as ROS, Python, MATLAB, node.js, LabVIEW, OpenCV, PCL, .NET and more.

7 System Integration

The small size of the stereo depth module and the independent placement of Vision Processor D4 provides system integrators flexibility to design into a wide range of products. Because the camera uses stereo vision technology, it is crucial that the stereo depth module does not flex throughout its service life. This creates unique mechanical and thermal implementation guidance. This section explains how to correctly integrate D4 depth camera into a system.

7.1 System Level Block Diagram

Figure 7-1. System Block Diagram – D415, D435, D435i, D455

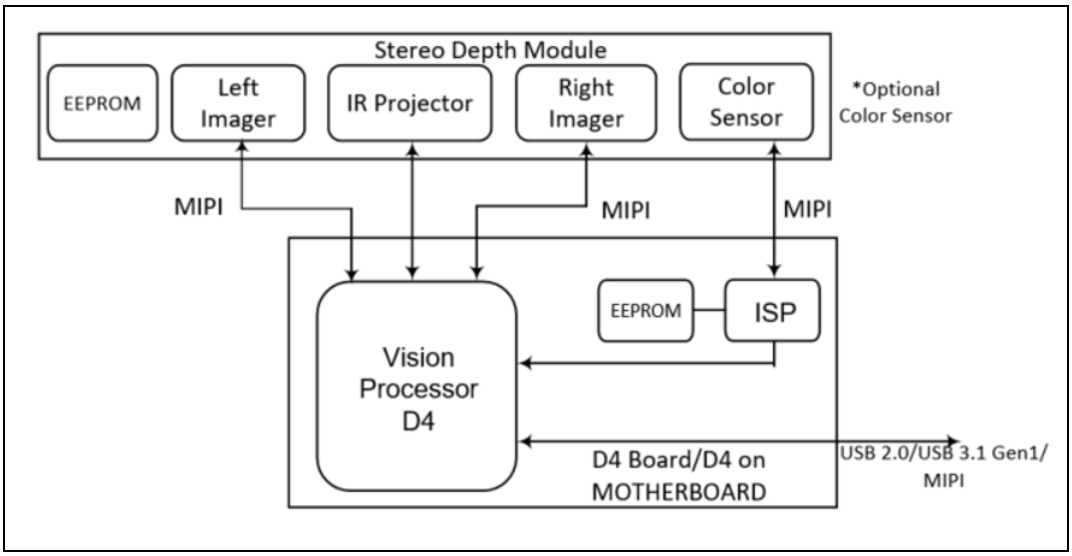

Figure 7-2. System Block Diagram – D405

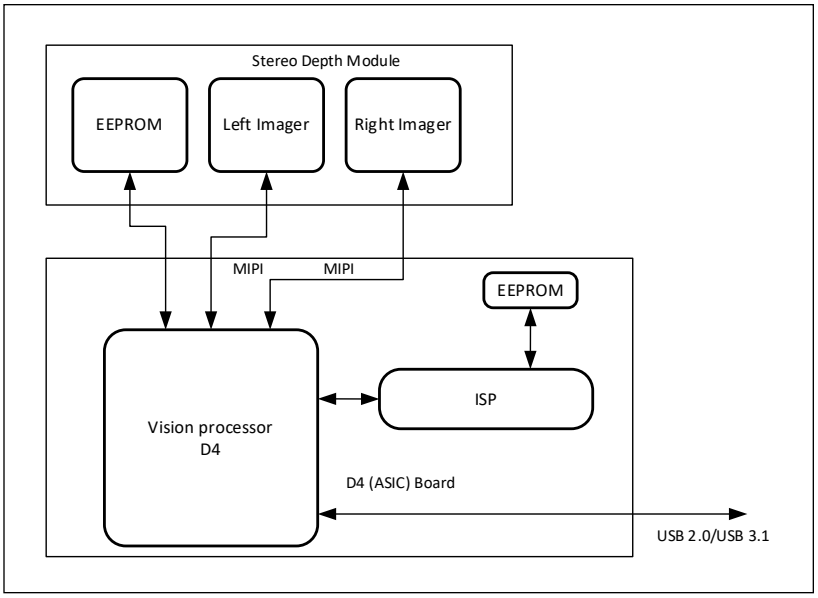

7.2 System Level Block Diagram

There are two options to integrate Vision Processor D4 into a system: integration of the Vision Processor D4 Board or by placing the Vision Processor D4 and support components directly on the host processor motherboard. The Vision Processor D4 Board simplifies system design and integration of the D4 depth camera system, whereas integrating the Vision Processor D4 onto the motherboard allows for a space optimized implementation.

7.2.1 Vision Processor D4 Board

The Vision Processor D4 Board has a standard USB Type-C connector and requires an appropriate USB Type-C cable to connect to a standard USB 2.0/USB 3.1 Gen 1 external port.

Figure 7-3. Intel® RealSense™ Vision Processor D4 Board – V1, V3

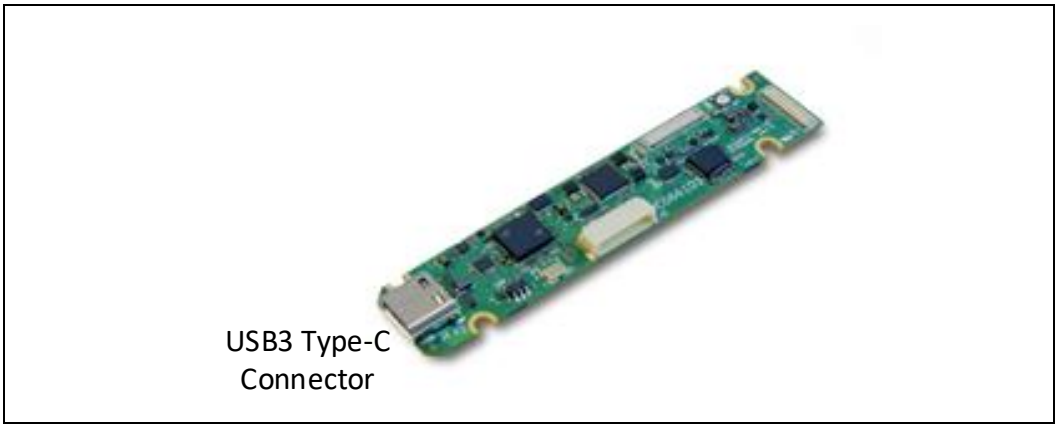

Figure 7-4. Intel® RealSense™ Vision Processor D4 Board – V4

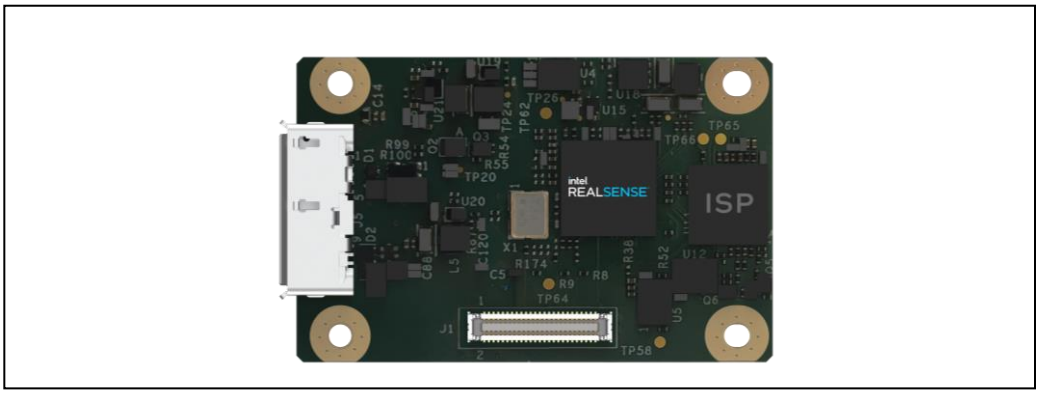

7.2.2 Vision Processor D4 on Motherboard

In the Vision Processor D4 on Motherboard option, Vision Processor D4 and support components are directly placed on the host processor motherboard. The depth module receptacle is on the host processor motherboard for connection to the stereo depth module.

Figure 7-5. Vision Processor D4 on Motherboard (Illustration)

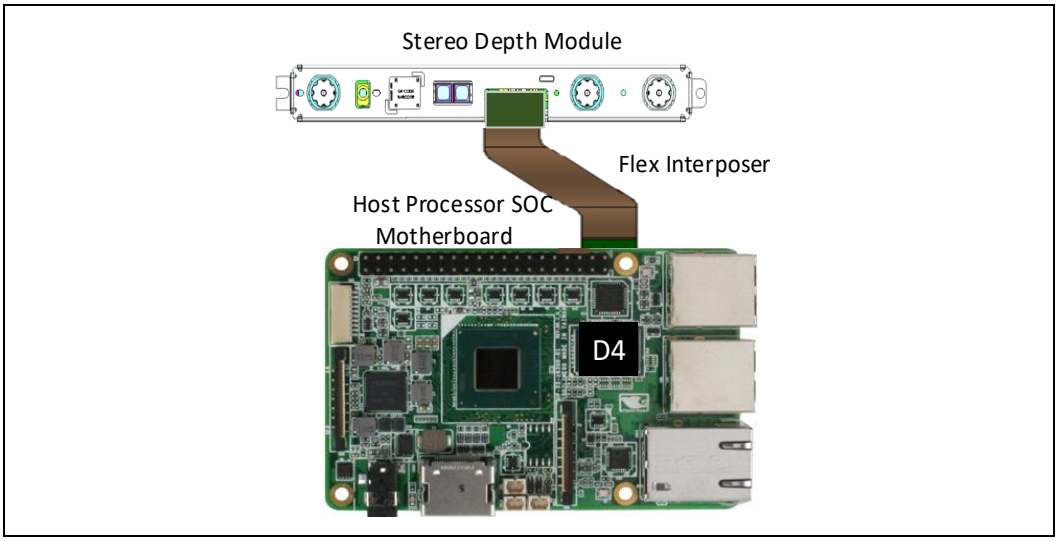

7.2.2.1 Firmware Update

The SPI flash chip assembled onto the motherboard requires a bootable firmware image for Vision Processor D4 to boot or to run the firmware update utility provided by Intel.

There are two implementation options:

1. Pre-program SPI flash chip with firmware before assembly on to motherboard or replace corrupt image with a good image SPI flash chip. The blank SPI flash chip can pre-programmed using a compatible adapter (i.e., PA8QFN8D) and supporting flash programmer.

2. A header or test points is connected in parallel to the SPI flash chip, then programmed directly with an SPI flash programmer. Vision Processor D4 SPI interface is put in high Z state by strapping EPGPIO4 pin to Ground when programmed directly with an SPI flash programmer.

7.3 D4 Camera System Power Delivery

D4 camera system **MUST** keep stereo depth module and the Vision Processor D4 on the same power rails. The stereo depth module holds a safety region in EEPROM that is configured by the firmware's protected region code. Keeping all components on the same rail prevents malicious software reset of the stereo depth module without causing a reset to the ASIC. Through this protection we ensure that all the safety logic is kept locked as long as the device is active. Ensure that power delivery implementation recommendations in Chapter 12 are followed in the design of D4 camera system.

Figure 7-6. D4 Camera System Power Scheme

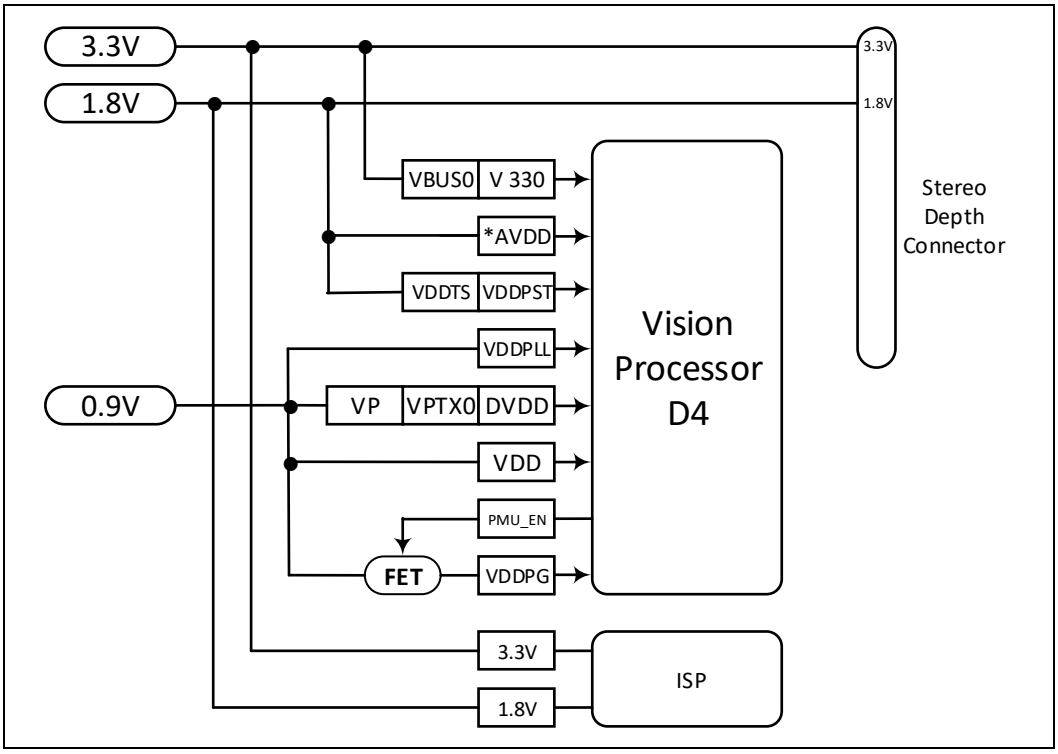

7.4 Thermals

The system thermal design must ensure that the component case temperatures are not exceeded. Thermal models for Vision Processor D4 Board and Depth Modules are available to conduct a thermal evaluation and validate the system thermal design.

A few notes for the power and TDP tables below:

1. Max Operating Mode at max resolution of the Depth and RGB imagers at 30 FPS
2. IR projector TDP is lower than power due to a lower percentage of energy dissipated as photonic emissions as opposed to heat
3. Voltage Regulator power is included as part of the individual component power

Table 7-1. Vision Processor D4 Board V1/V2/V3 – Component Power and TDP at Max Operating Mode(1)

Component	Power	TDP	Unit
Vision Processor D4	618	618	mW
Color Camera ISP	196.83	196.83	mW
Voltage Regulators/Other	491.64	491.64	mW
All Components	1306.47	1306.47	mW

Table 7-2. Vision Processor D4 Board V4 – Component Power and TDP at Max Operating Mode[1]

Component	Power	TDP	Unit
Vision Processor D4	878	878	mW
ISP	165	165	mW
Voltage Regulators/Other	187	187	mW
All Components	1230	1230	mW

Table 7-3. Stereo Depth Module (D410/D415) – Component Power and TDP at Max Operating Mode[1]

Component	Power	TDP	Unit
Left Imager	118.5	118.5	mW
Right Imager	118.5	118.5	mW
RGB Imager[1]	118.5	118.5	mW
IR Projector[2]	1296	936	mW
EEPROM + Thermal Sensor	4	4	mW
All Components	1655.5	1295.5	mW

Notes:

(1) Only applies to D415

(2) Only applies to D410 and D415

Table 7-4. Stereo Depth Module (D430) – Component Power and TDP at Max Operating Mode[1]

Component	Power	TDP	Unit
Left Imager	177	177	mW
Right Imager	177	177	mW
IR Projector	1620	1260	mW
EEPROM + Thermal Sensor	4	4	mW
All Components	1978	1618	mW

Table 7-5. Stereo Depth Module (D450) – Component Power and TDP at Max Operating Mode[1]

Component	Power	TDP	Unit
Left Imager	177	177	mW
Right Imager	177	177	mW
RGB Imager	177	177	mW

IR Projector	1620	1260	mW
EEPROM + Thermal Sensor	4	4	mW
All Components	2335	1975	mW

Table 7-6. Stereo Depth Module (D401) – Component Power and TDP at Max Operating Mode(1)

Component	Power	TDP	Unit
Left Imager(2)	124	124	mW
Right Imager(2)	124	124	mW
EEPROM + Thermal Sensor	4	4	mW
Voltage Regulators	78	78	mW
All Components	330	330	mW

Note:

(2) Max. Operating Mode = Depth Resolution 848 x 480 @ 90 FPS, Color Resolution 848 x 480 @ 90 FPS

Table 7-7. Stereo Depth Camera (D415) – Component Power and TDP at Max Operating Mode(1)

Component	Power	TDP	Unit
Left Imager	118.5	118.5	mW
Right Imager	118.5	118.5	mW
RGB Imager	118.5	118.5	mW
IR Projector	1296	936	mW
EEPROM + Thermal Sensor	4	4	mW
Vision Processor D4 Board	1306.47	1306.47	mW
All Components	2961.97	2601.97	mW

Table 7-8. Stereo Depth Camera (D435) – Component Power and TDP at Max Operating Mode(1)

Component	Power	TDP	Unit
Left Imager	177	177	mW
Right Imager	177	177	mW
RGB Imager	118.5	118.5	mW
IR Projector	1620	1260	mW
EEPROM + Thermal Sensor	4	4	mW
Vision Processor D4 Board	1306.47	1306.47	mW
All Components	3402.97	3042.97	mW

Table 7-9. Stereo Depth Camera (D455) – Component Power and TDP at Max Operating Mode[1]

Component	Power	TDP	Unit
Left Imager	177	177	mW
Right Imager	177	177	mW
RGB Imager	177	177	mW
IR Projector	1620	1260	mW
EEPROM + Thermal Sensor	4	4	mW
Vision Processor D4 Board	1306.47	1306.47	mW
All Components	3461.47	3101.47	mW

Note:

(1) Max. Operating Mode = Depth Resolution 1280 x 720 @ 30 FPS, Color Resolution - 1920 x 1080p @ 30FPS

Table 7-10. Stereo Depth Camera (D405) – Component Power and TDP at Max Operating Mode[1]

Component	Power	TDP	Unit
Left Imager[2]	124	124	mW
Right Imager[2]	124	124	mW
EEPROM + Thermal Sensor	4	4	mW
Vision Processor D4 Board	1230	1230	mW
All Components	1482	1482	mW

Note:

(1) Max. Operating Mode = Depth Resolution 848 x 480 @ 90 FPS, Color Resolution 848 x 480 @ 90 FPS

Table 7-11. Vision Processor D4 Board Components – Case Temperature Limits (Still Air)

Component	Min	Max[1]	Unit
Vision Processor D4	0	85	°C
Color Camera ISP	0	70	°C

For the Depth Modules, case temperature is specified for the overall depth module and the thermocouple test location is any point on bottom metal stiffener

Figure 7-7. Bottom Stiffener Depth Module D410/D415

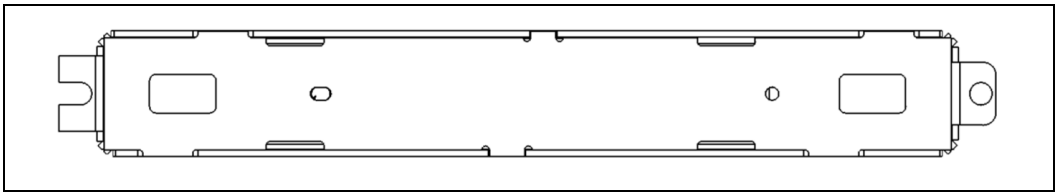

Figure 7-8. Bottom Stiffener Depth Module D430

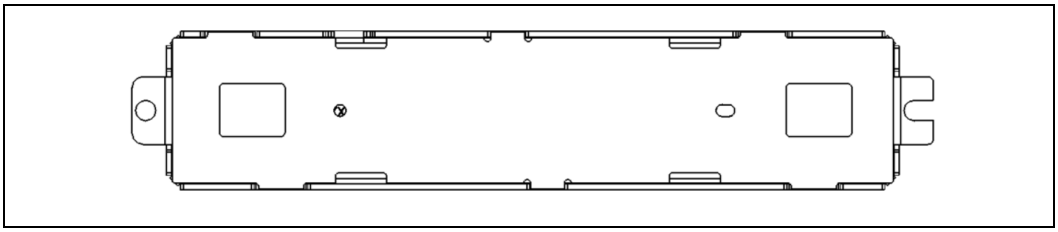

Figure 7-9. Bottom Stiffener Depth Module D450

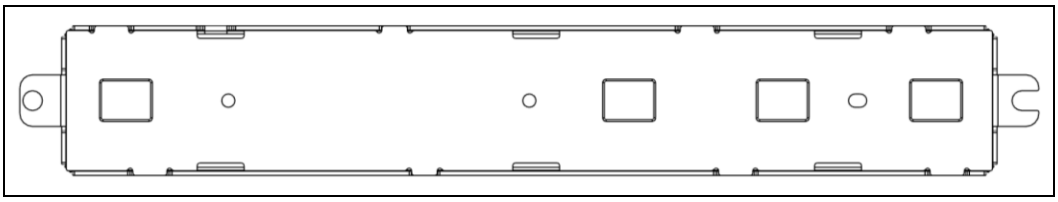

Figure 7-10. Bottom Stiffener Depth Module D401

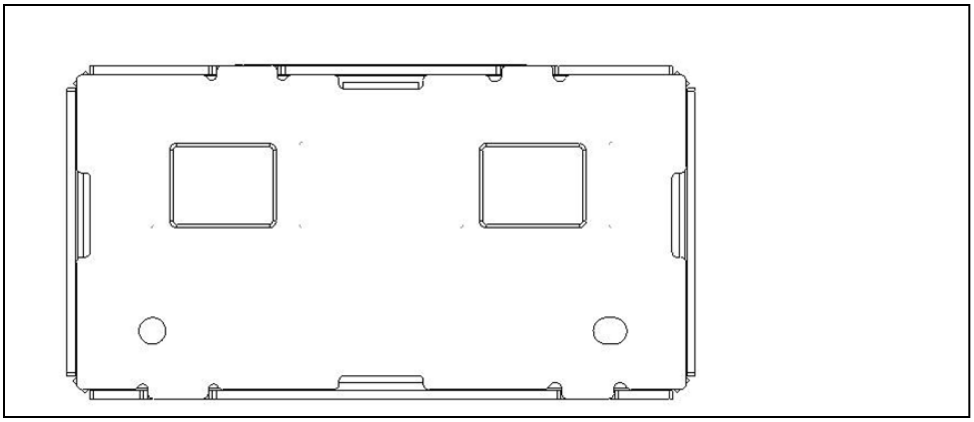

7.5 Stereo Depth Module Flex

It is critical that the stereo depth module does not experience flex during system integration or during use after integration. Micron level flexing of the module can render the calibration incorrect and will result in poor performance or nonfunctional depth data. It is important for system designers to isolate the module from any chassis flex the system may encounter. While the module has a reinforcement

housing, the housing is not intended to counter loads from chassis flex. The primary function of the housing is to prevent loss of calibration from handling and operating environments.

It is possible for the module to recover depth performance after experiencing permanent deformation. However, the module's ability to recover is dependent on the amount of deformation experienced.

It is required, due to the high probability that some flex will be experienced by the module during system integration, to perform an OEM calibration procedure after the stereo depth module is fully integrated into its final housing/location.

7.6 Stereo Depth Module Mounting Guidance

There are a few mounting options depending on the SKU. The sections below describe the various options.

7.6.1 Screw Mounting/End Mounting

This section applies to the following SKUs: D410, D430 and D450.
The stereo depth module incorporates a screw hole and a screw fork for module mounting. The stereo depth module should be mounted on a large heat sink or a heat dissipating structure element using a M1.6 screw at the screw hole and fork. The recommended torque for both screws is 1.6Kgf*cm. Thermal interface material should be used on the backside region of the IR projector and the stereo imagers, between camera module and heat sink or heat dissipating structure being used for thermal transfer.

Note: Thermal double-sided adhesive is recommended.

Figure 7-11. Stereo Depth Module Screw Mounting/End Mounting – D410

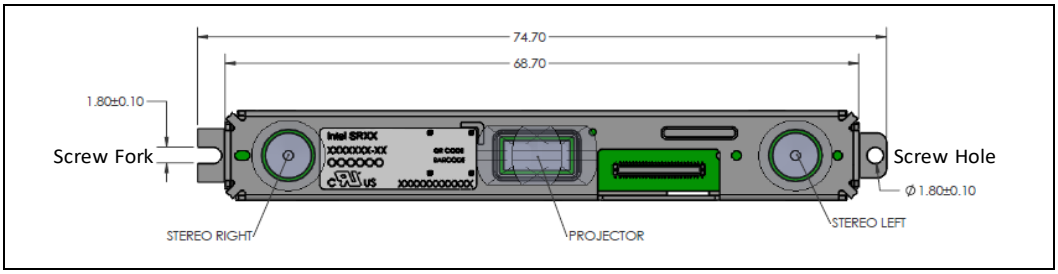

Figure 7-12. Stereo Depth Module Screw Mounting/End Mounting – D430

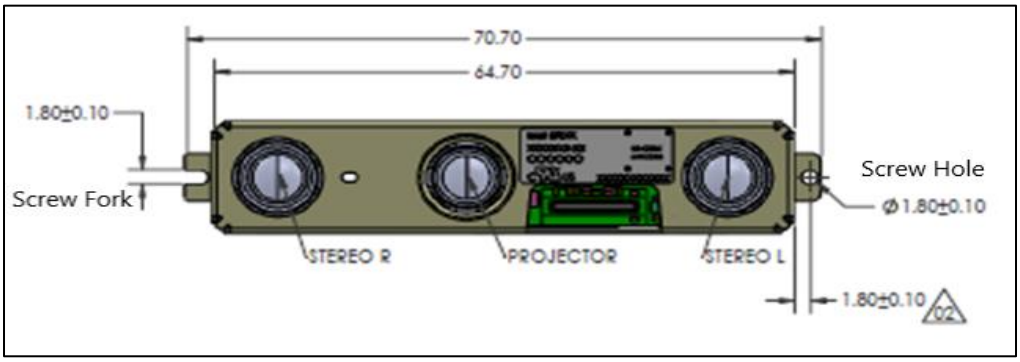

Note:

1. For other SKUs, please refer to 10 Mechanical Drawings".

7.6.2 Bracket Mounting/Mid-Module Mounting

This section applies to all the D400 SKUs, including D415.

The Stereo Depth module should be mounted on large heat sink or a heat dissipating structure element using the bracket placed at the center of the module. The bracket is secured to the heat sink or structure element using screws. Thermal interface material should be used on the backside region of the IR projector and the two stereo imagers, between the camera module and the heat sink or heat dissipating structure being used for thermal transfer. The camera module should have a minimum of 0.2 mm clearance from all sides except for the area around the bracket. It is not necessary to insert screws at the screw hole and screw fork when using a mounting bracket.

Note:

1. For larger modules, such as Intel® RealSense™ Depth Module D450, if a mounting bracket is used without the screw hole and fork method, it is recommended to use a large bracket

Figure 7-13. Stereo Depth Module Bracket example for D415

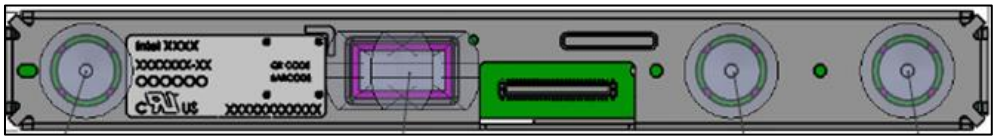

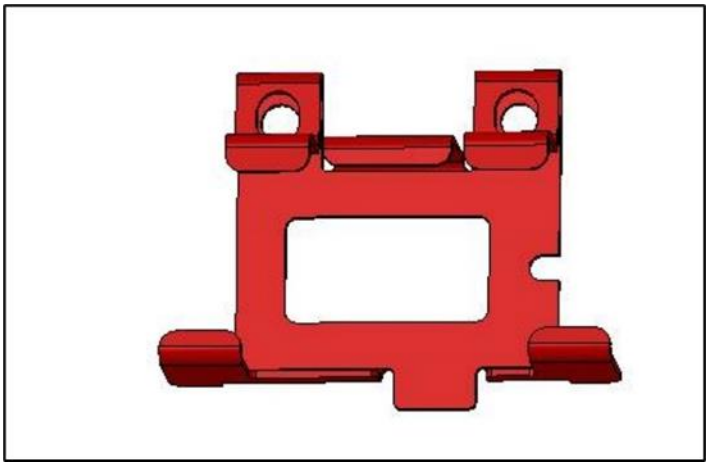

Note:

1. Intel does not sell these brackets; they are only used inside the Intel RealSense cameras.

The figure below demonstrates how the D415 module is mounted inside the D415 camera using a bracket.

Figure 7-14. Stereo Depth Module Bracket Mount – D415

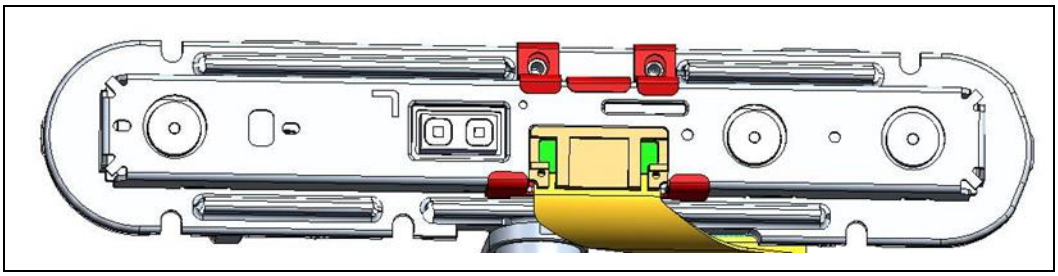

Figure 7-15. Stereo Depth Module Mid-Mounting – D401

The Stereo Depth module should be mounted on a large heat sink or heat dissipating structure element using a structurally robust plastic bracket placed at the center of module. The bracket will provide surface pressure on the top face of the module. The bracket is secured to the heat sink or structure element using four M1.6 screws with recommended torque of 1.6 Kgf*cm and double-sided tape in the center to prevent side displacement and to ensure permanent anchoring to the module before adding the four M1.6 screws. Thermal interface material should be used on heat sink or heat dissipating structure element, corresponding with the position of the two stereo imagers. The camera module should have a minimum of 0.2 mm clearance from all sides except for the area around the bracket. The module is precisely located and placed onto the heat sink by using 2 locating features: one precision pin and one locating slot-pin.

7.6.3 Stereo Depth Module Air gap

A minimum air gap of 0.3 mm is recommended between the tallest components on the stereo depth module to the cover window

Figure 7-16. Stereo Depth Module Air Gap

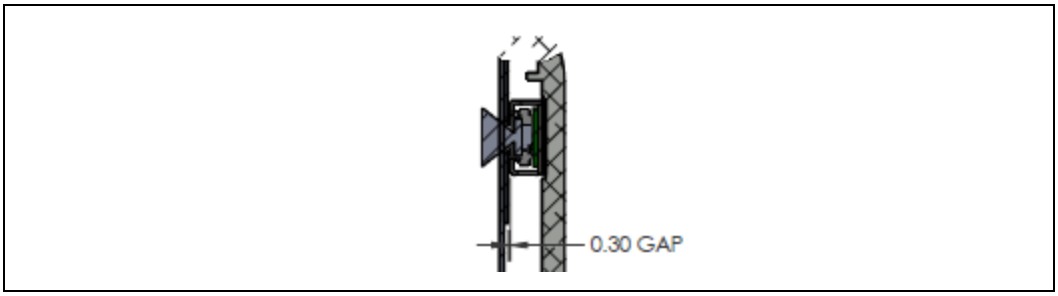

7.7 Thermal Interface Material

Thermal interface material, specifically thermal paste/grease is recommended to be inserted between the stereo depth module and the heat dissipating structure (heat sink) to improve the thermal coupling between these two components. A thermal paste with thermal conductivity in the 3 - 4 W/mK range is recommended. This paste must be applied in a thin layer on the back side of the IR projector and also under the left and right imagers, filling up the air gap under the imagers.

7.8 Heat Sink

The heat sink or heat dissipating structure element used to mount the stereo depth module and ASIC Board should be a minimum of 2 – 3 mm in thickness. It is advisable to extend the heat sink by a few mm beyond the edges of the stereo depth module. It is also recommended to have thermal fins on the back side of the heat dissipating structure. In applications where weight is a concern, high thermal conductivity graphite tape can be attached to the back side of the heat sink. This graphite tape must be at least as big as the metal heat sink and extended out beyond the metal as much as possible for optimal cooling. Heat sink metal must be a high conductivity aluminum alloy or copper.
In cases where the module is expected to operate at high ambient temperatures, additional airflow may be required to ensure temperature limits are not exceeded. These are guidelines for thermal integration of the D4 camera in the system. However actual testing or system level thermal modeling is recommended before finalizing the solution.

7.9 Cover Design and Material Guidance

The stereo depth module components must be covered to minimize dust and humidity. The transparent cover material stack-up used must provide acceptable transmission based on the component wavelengths. Anti-reflective coatings can help increase the transmission of the cover material. Cover material that reduces light transmission can result in poor depth performance and will decrease the working range of the camera. Nominally flat, non-distorting and low scattering cover material should be used.

Table 7-12. Component Transmission

Component	Wavelength	Unit
Left and Right Imager (Intel® RealSense™ D410/D430/D450)	400 to 865 (Visible and Infrared) @ 98% transmission rate or higher at all viewing and transmitting angles	nm
Left and Right Imager (Intel® RealSense™ D401)	400 to 900 (Visible and Infrared) @ 95% transmission rate or higher at all viewing and transmitting angles	nm
IR Projector	850nm ± 15 nm @ 98% transmission rate or higher at all viewing and transmitting angles	nm

Notes:

1. Higher transmissions @ 98% transmission rate or higher is recommended and not a requirement
2. Intel RealSense Camera 400 Series provides control over laser power and sensor exposure. Minor loss of transmission due to cover material transmissivity might be compensated by increasing exposure when less light is able to reach the sensors and by increasing laser power for IR projector pattern projection loss.
3. Uncoated clear acrylic (plexiglass) plastic cover is an example for cover material
4. Anti-reflective coatings can help increase the transmission of cover material

If different cover material is used in front of the cameras and the IR projector to maximize transmission based on component wavelengths, cover design considerations should ensure that the FOV of the cameras and FOP of the IR projector are not impacted.

7.10 Gaskets

Gaskets are recommended for providing optical isolation and dust protection. However, gaskets can impede FOV and place unwanted stress on the module or the individual sensor lens holders.

Gasket static force can deform the cosmetic baffle/lens holder resulting in poor image quality and permanent damage to the camera. Gaskets placed on the module stiffener can transfer chassis flex into the camera module causing loss of depth data. Gasket thickness has a large effect on the static force applied to the module surface. The thinner the seal, the greater the static force applied. Once the gasket is compressed, the static force will increase exponentially.

Figure 7-17. Illustration of Gasket Placement and Cover Material

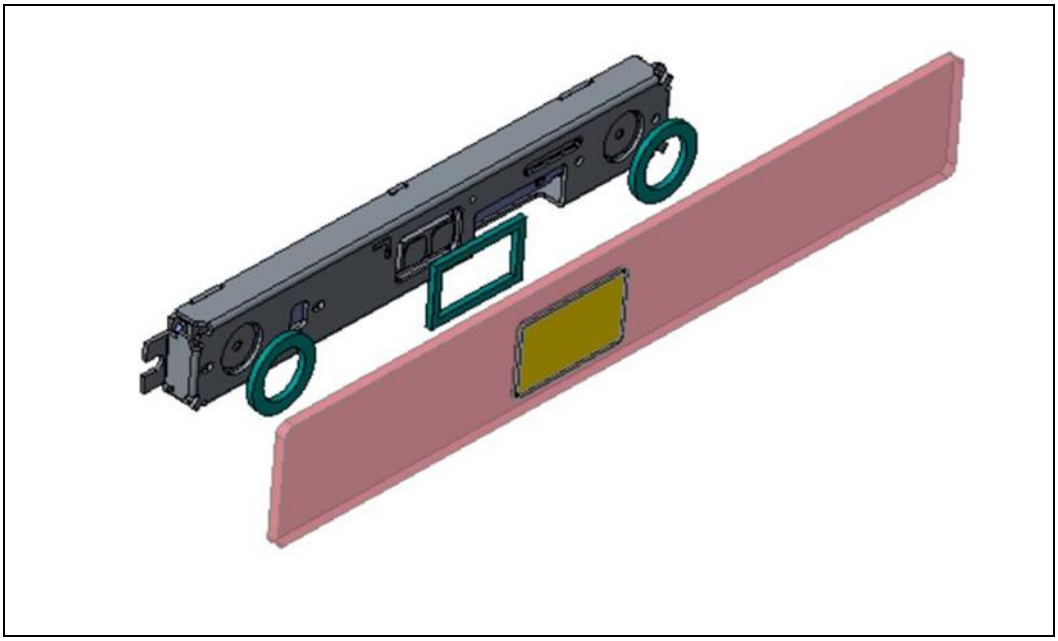

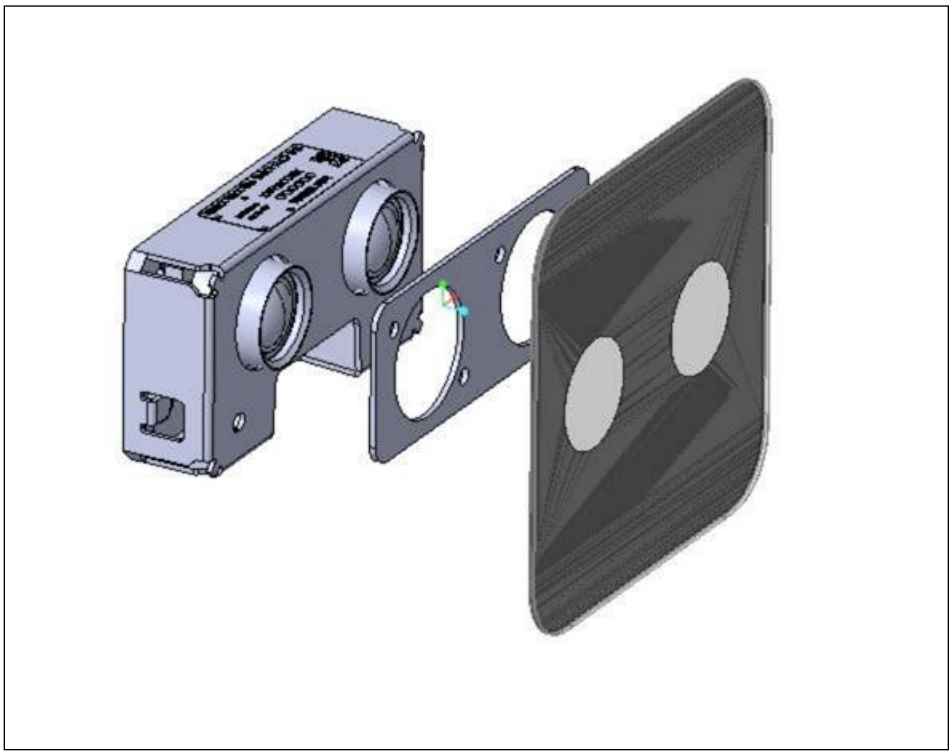

7.10.1 Optical Isolation

It is recommended to isolate the left/right imagers and IR projector from each other to prevent reflections off the cover material. Not properly isolating the cameras can result in leakage light as shown in Figure 7-18. Example of Light Leakage Effects

To prevent light leakage, it is recommended to use a gasket material in between the cover holes and the module. The gasket material needs to be compliant so that it does not transmit chassis flex forces to the module.

Figure 7-18. Example of Light Leakage Effects

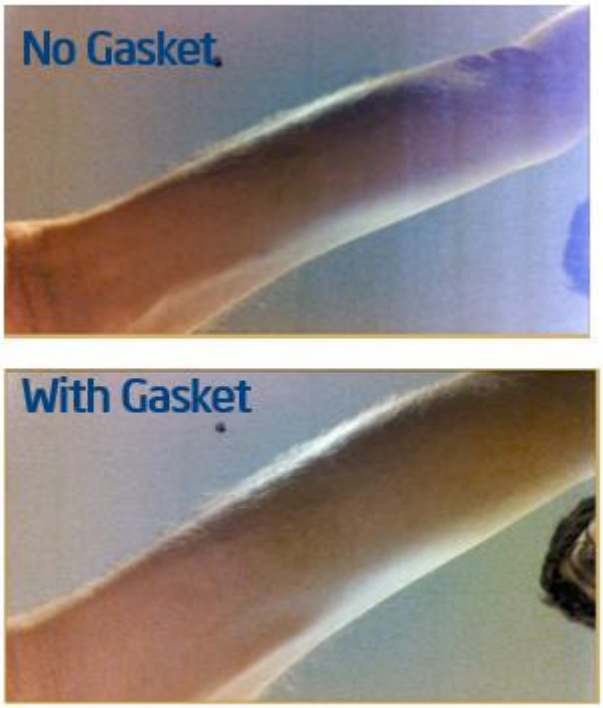

7.10.2 Dust Protection

Dust particles can accumulate over the camera lenses which can be visually unappealing and degrade image quality.

7.11 Firmware Recovery

To support firmware recovery, a 3.3 V controllable interrupt must be connected to the Vision Processor D4 DFU (Device Firmware Update) pin .

The ability to recovery the image system if the firmware becomes corrupted requires the D4 reset and DFU pins driven high for 160 ms. The DFU pin should remain high when D4 is out of reset for D4 to boot in DFU mode. The 160 ms ensures that the DFU pin is held high throughout the reset sequence.

Figure 7-19. Firmware Recovery Sequence

Sequence	Timing Diagram
Firmware Recovery	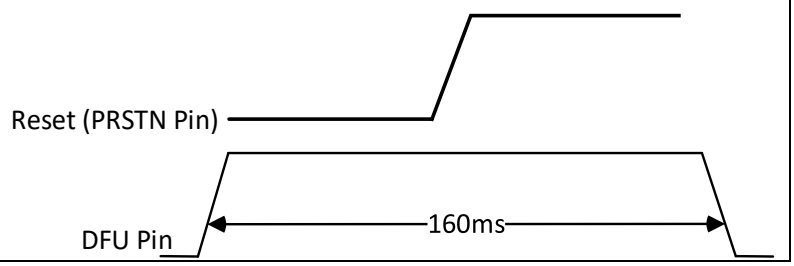

7.12 Calibration Support

It is required to have an accessible USB port to access the host system. The accessible USB port would allow for reliable streaming of images to an external PC, to determine the calibration parameters and to write back these parameters via the host system.

The USB port should be able to be configured in a mode where it can access the host. The access to USB port is required at manufacturing and is not intended to be available on the shipped product or accessible by the end user.

7.13 Multi-Camera Hardware Sync

Intel® RealSense™ D400 Series supports a hardware sync signal for multi-camera configuration. For multiple cameras to be hardware synchronized so as to capture data at identical times and frame rates, pins 5 (SYNC) and pins 9 (Ground) on the external sensor sync connector will need to be connected. The external sensor sync connector is located on the Vision Processor D4 V1 and V3 board and is accessible on the Depth Cameras.

D405 does not support the hardware sync signal for multi-camera configuration.

Figure 7-20. External Sensor Sync Connector Location on D4 Vision Processor V1 and V3 Board

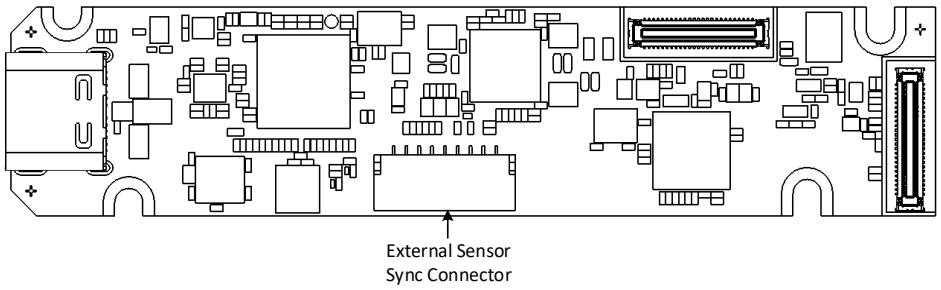

Figure 7-21. External Sensor Sync Connector Location on Depth Camera D435/D435i/D455

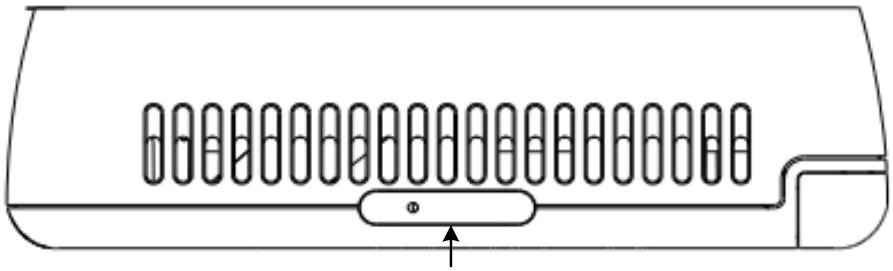

For additional details on how to implement the multi-camera hardware sync feature, please refer to multi-camera white paper at https://realsense.intel.com/intel-realsense-downloads/#whitepaper.

7.14 Handling Conditions

Table 7-13. Electrostatic Discharge Caution

To provide a consistent ESD protection level during D4 system assembly and rework, it is recommended that the JEDEC JESD625-A requirements standard be incorporated into the ESD environment controls.

§ §

8 Platform Design Guidelines

The Platform Design Guidelines have been developed to enable maximum flexibility for board designers while reducing the risk of board related issues. Design recommendations are based on Intel's simulations and are strongly recommended.

8.1 Vision Processor D4 on Motherboard

This Design Guidelines provide Vision Processor D4 on motherboard implementation recommendations for the Kaby Lake U/Y (7th Generation Intel® Core™ Processors) and Cherry Trail T4 (Intel® Atom™ Z8000 Processor Series) platforms with 8/10 layer Type 4 PCB.

Supported platform topologies are:

1. Vision Processor D4 with USB Host Interface
2. Vision Processor D4 with MIPI Host Interface
3. Vision Processor D4 on Board for USB Integrated Peripheral

Figure 8-1. Vision Processor D4 with USB Host Interface

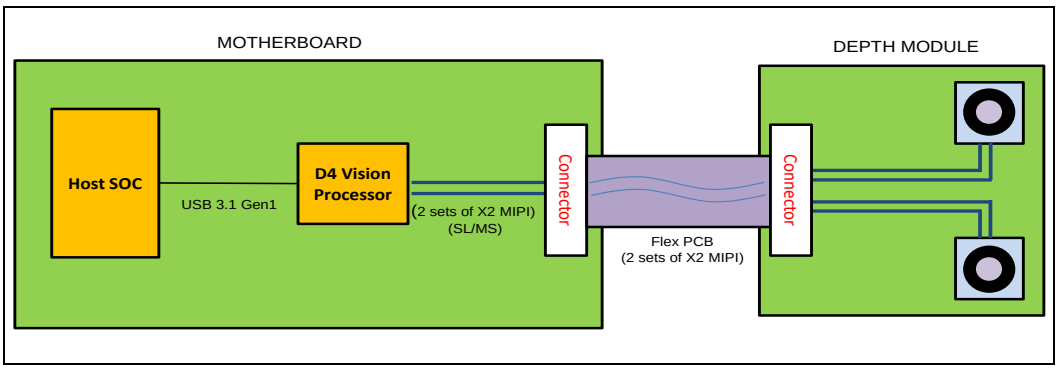

Figure 8-2. Vision Processor D4 with MIPI Host Interface

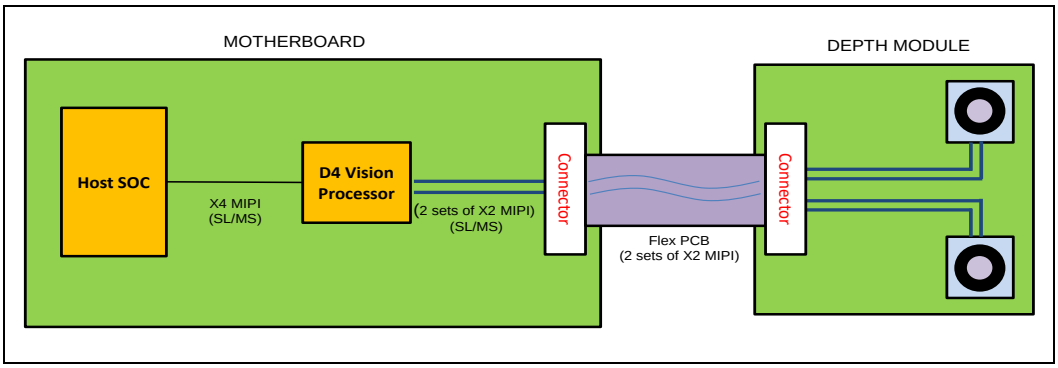

Figure 8-3. Vision Processor D4 on Board for USB Integrated Peripheral

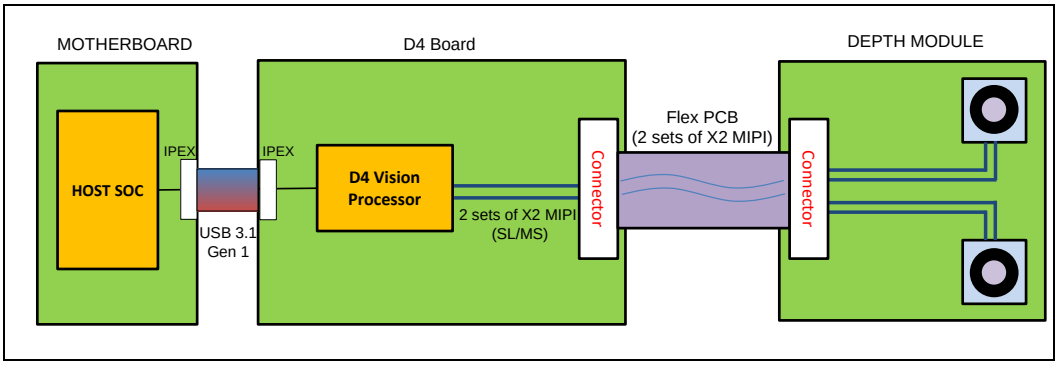

8.2 Kaby Lake U and Kaby Lake Y platforms

8.2.1 Kaby Lake Platform Introduction

The Kaby Lake U platform consists of a Kaby Lake U processor plus a Kaby Lake Platform Controller Hub (PCH) in the same Multi Chip Package (MCP). Similarly, the Kaby Lake Y platform consists of a Kaby Lake Y processor plus a Kaby Lake PCH in the same Multi Chip Package (MCP).

Note:

1. For Kaby Lake U/Y platform design guidelines, refer to Kaby Lake U and Y Platform Design Guide (Doc# 561280)

8.2.2 Supported PCB Stack-Up and Routing Geometries

Refer to Kaby Lake U/Y Platform Design Guide for type 4 PCB stack up, Break-out/Break-in geometries, Main Route stripline/microstrip geometries and Via recommendations. It is strongly recommended to follow the impedance criteria in the design guide for the given interface.

8.2.3 Vision Processor D4 on Motherboard with USB Host Interface

8.2.3.1 USB 3.1 Gen 1 Motherboard Routing

Figure 8-4. Host Processor - Vision Processor D4

Table 8-1. Host Transmit – Vision Processor D4 Receive Routing Guidelines

Parameter	Break-out (BO)	Main Route (MR)	Break-in (BI)	Total Allowed Length (L_BO + L_MR + L_BI)
Maximum Segment Length (Inches)	0.25	15-BO-BI	0.25	15
Maximum Allowed Channel Insertion loss (dB)				<=15 dB @ 2.5 MHz

Table 8-2. Vision Processor D4 Transmit - Host Receive Routing Guidelines

Parameter	Break-out (BO)	Main Route (MR)	Break-in (BI)	Total Allowed Length (L_BO + L_MR + L_BI)
Maximum Segment Length (Inches)	0.25	15-BO-BI	0.25	15
Maximum Allowed Channel Insertion loss (dB)				<=15 dB @ 2.5 MHz

Notes:

1. Simulation results shows that an overall 15-inch channel routing length is good for the USB 3.1 Gen 1 Vision Processor D4 to Host connection motherboard. This connection does not include any connector or cable.
2. All routing is recommended to be at an 85 ohm impedance

3. Break-out/break-in should be maximum length of 250 mil for 85 ohm routing. If there is any impedance variation due to narrow escape BGA break-out, the maximum routing length should be 150 mil.
4. Maximum number of via count: 4 (including package microvia)
5. It is strongly recommended that overall channel loss is within -15 dB for satisfactory performance

8.2.4 Vision Processor D4 on Motherboard with MIPI Host Interface

8.2.4.1 MIPI Motherboard Routing

Figure 8-5. Vision Processor D4 Transmit - Host Receive

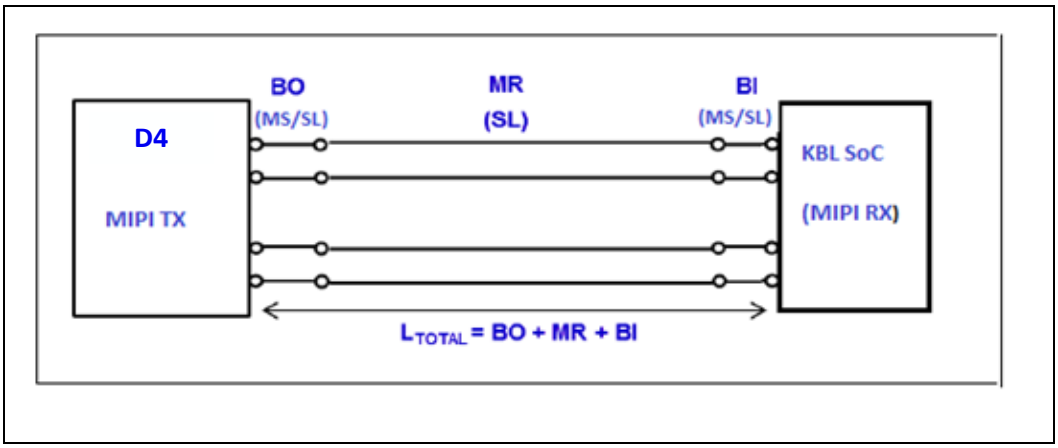

Table 8-3. Vision Processor D4 Transmit – Host Receive Routing Guidelines

Parameter	Break-out (BO)	Main Route (MR)	Break-in (BI)	Total Allowed Length (L_BO + L_MR + L_BI)
Maximum Segment Length (inches)	0.25	15-BO-BI	0.25	15
Maximum Allowed Channel Insertion loss (dB)				<=5.5 dB @ 750MHz

Notes:

1. Maximum via count = 4 vias including the first micro-via from package ball
2. Minimum stripline break-out pair-to-pair spacing of 2.36 mils is allowed near package ball out region with maximum length of 250 mils
3. Main route and break-in nominal impedance is required to be consistent. Example: 85 ohm main route and 85 ohm break-in. Mixture of nominal impedance is not recommended.
4. Length matching within a differential pair is +/- 5 mils maximum

5. The maximum allowed channel insertion loss budget dictates the total allowed length. The total insertion loss allowed for interconnect from the D4 package die bump to Kaby Lake SoC package die bump is about 5.5dB at 750 MHz. It should be noted that although only the insertion loss value at the fundamental frequency (750 MHz) is specified, the insertion loss curve up to about 1.5 GHz should be well behaved with no strong resonance or ripple.

8.2.4.2 MIPI Motherboard Routing (Stereo Depth Module Transmit to Vision Processor D4 Receive)

Figure 8-6. Stereo Depth Transmit - Vision Processor D4 Receive

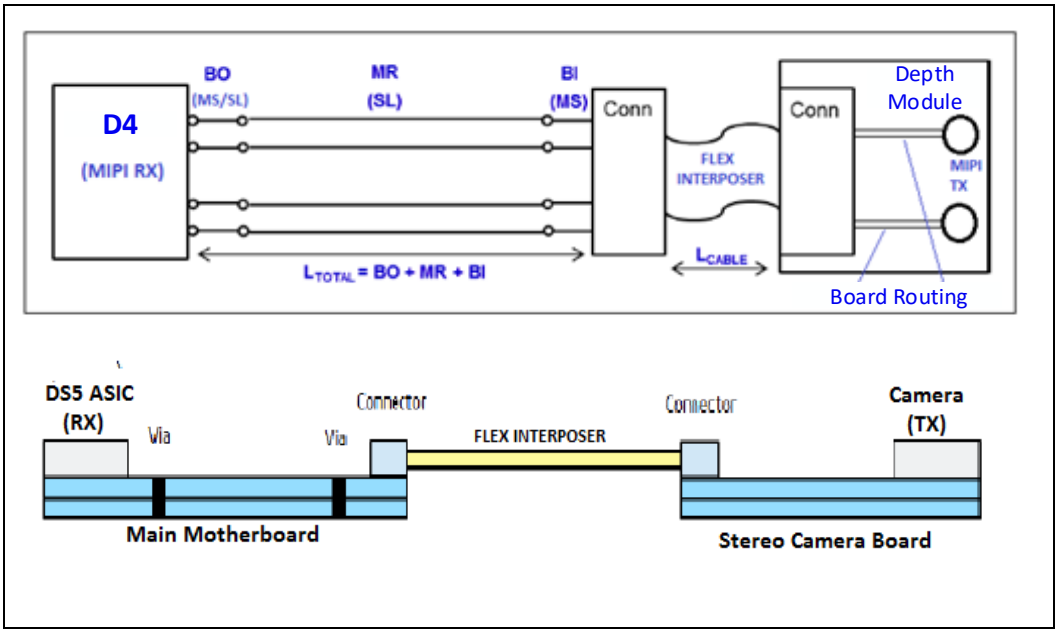

Table 8-4. Stereo Depth Module Transmit - Vision Processor D4 Receive Routing Guidelines

Parameter	Break-out (BO)	Main Route (MR)	Break-in (BI)	Flex Interposer Length (L_Cable)	Camera Board Length (L_Camera)	Total Allowed Length (L_MB + L_Cable + L_Camera)
Maximum Segment Length (Inches)	0.25	15 – L_Cable - L_Camera – BO - BI	0.25	15-L_MB-L_camera	L_Camera (max ~2 inches)	15
Maximum Allowed Channel Insertion loss (dB)						<=5.5 dB @ 750MHz

Notes:

1. Stereo depth module MIPI routing length are assumed to be 2 inches (max)
2. Maximum via count = 3 vias including the first micro-via from package ball

3. Minimum stripline break-out pair-to-pair spacing of 2.36 mils is allowed near package ball out region with maximum length of 250 mils
4. Main route and break-in nominal impedance is required to be consistent. Example: 85 ohm main route and 85 ohm break-in. Mixture of nominal impedance is not recommended.
5. Length matching within a differential pair is +/- 5 mils maximum
6. No length match requirements for signals routed to different camera modules
7. The maximum allowed channel insertion loss budget dictates the total allowed length. The total insertion loss allowed for interconnect from the package die bump to the connector on the camera module is about 5.5 dB at 750 MHz as shown in the table. This recommendation allows the use of any cable type as long as the maximum allowed insertion loss is met. It should be noted that although only the insertion loss value at the fundamental frequency (750 MHz) is specified, the insertion loss curve up to about 1.5 GHz should be well behaved with no strong resonance or ripple.
8. Flex Interposer recommendation: 85-100ohm impedance with maximum length of 4 - 6 inches. The recommended interposer should be Flex PCB based design.

Figure 8-7. Flex Interposer PCB Stack-Up

TOP	CONDUCTOR	COPPER	0.984252
	DIELECTRIC	FR-4	2.578740
02_SIG1	CONDUCTOR	COPPER	0.708661
	DIELECTRIC	FR-4	1.968500
03_PWR1	CONDUCTOR	COPPER	0.708661
	DIELECTRIC	FR-4	31.771700
04_GND1	CONDUCTOR	COPPER	0.708661
	DIELECTRIC	FR-4	1.968500
05_SIG2	CONDUCTOR	COPPER	0.708661
	DIELECTRIC	FR-4	2.578740
BOTTOM	CONDUCTOR	COPPER	0.984252

8.2.5 Vision Processor D4 Board for Integrated Peripheral (USB 3.1 Gen 1 Host to Vision Processor D4 Routing)

Figure 8-8. USB 3.1 Gen 1 Host to Vision Processor D4 Topology

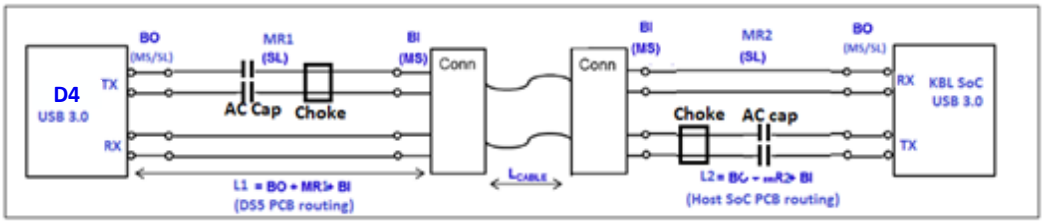

Table 8-5. USB 3.1 Gen 1 Host to Vision Processor D4 Routing Guidelines

	Vision Processor D4 Board			USB 3.1 Gen 1 Cable	Host Motherboard		
Parameter	**Break-out (BO)**	**Main Route (MR)**	**Break-in (BI)**	**Cable Length (L_Cable)**	**Break-out (BO)**	**Main Route (MR)**	**Break-in (BI)**
Maximum Segment Length (Inches)	0.25	2	0.25	15 (max)	0.25	5	0.25
Maximum Allowed Channel Insertion loss (dB)	<= 15 dB @ 2.5GHz Max recommended USB 3.1 Gen 1 cable loss <= 7.5 dB @2.5GHz						

Notes:

1. The maximum allowable motherboard routing of USB 3.1 Gen 1 signals on Host PCB should be 5 – 6 inches and routing on Vision Processor D4 Board should be 2 – 3 inches.
2. It is recommended that an 85 ohm common mode choke (CMC) be designed in-line with both the USB 3.1 Gen 1 signals. The CMC should be placed as close to the connector as possible.
3. It is required that a 0.1 µF AC coupling capacitor is designed in series with both the USB 3.1 Gen 1 signals.
4. The USB 3.1 Gen 1 cable assembly should have a differential impedance of 85 Ohms with a tolerance of ± 10%.
5. The max cable length should not exceed 15 inch with target loss of 7.5 dB @ 2.5 GHz
6. Overall channel loss including cable should not exceed 15 dB @ 2.5 GHz

8.2.6 USB2.0 Design Guidelines (USB2 Host to Vision Processor D4 Routing)

Figure 8-9. USB2.0 Host to Vision Processor D4

Parameter	Break-out (BO)	Main Route (MR)	Break-in (BI)	Total Allowed Length (L_BO + L_MR + L_BI)
Maximum Segment Length (inches)	0.25	15-BO-BI	0.25	15
Maximum Allowed Channel Insertion loss (dB)				

Notes:

1. Simulation results shows that an overall 15 inch channel routing is good for USB 2.0 D4 to Host topology on motherboard. This topology does not include any connector or cable.
2. All routing is recommended to be 85 ohm
3. Break-out/break-in should be max of 250 mil for 85 ohm routing. If there is any impedance variation due to narrow escape BGA break-out, the max routing should be 150 mil.
4. Maximum number of via count: 4 (including package microvia)
5. It is strongly recommended that overall channel loss to be within -15dB for satisfactory performance

8.3 Cherry Trail T4 Platform

8.3.1 Cherry Trail T4 Platform Introduction

The Cherry Trail T4 is the Intel Architecture (IA) SoC that integrates an Intel® processor core, graphics, memory controller, and I/O interfaces into a single system-on-chip solution.

Note: For Cherry Trail T4 platform design guidelines, please refer to Cherry Trail T4 Platform Design Guide. (Doc# 537901)

Note: Cherry Trail platform supports 2 SoC SKUs, T3 and T4. The Vision Processor D4 platform design guidelines discussed in this chapter are only applicable to the T4-based Cherry Trail platform. For information on the Cherry Trail T4 SoC, please refer to Intel® Atom™ Z8000 Processor Series - External Design Specification (EDS) (Doc# 539071)

8.3.2 Vision Processor D4 Platform Design Guidelines

The Vision Processor D4 platform design guidelines on the Cherry Trail T4 platform follow the same guidelines as specified for the Kaby Lake U and Y platforms.

8.3.2.1 Supported PCB Stack-Up and Routing Geometries

Refer to Cherry Trail T4 Platform Design Guide for Type 4 PCB stack up, Break-out/Break-in routing geometry, Main Route stripline/microstrip geometry and Via

recommendations. It is strongly recommended to follow the impedance criteria in the design guide for the given interface.

9 Regulatory Compliance

9.1 System Laser Compliance

Certification for the Intel® RealSense™ Depth Cameras and Depth Modules, paired with Intel® RealSense™ Vision Processor D4 Board, following integration guidelines, is transferable to the system and no system recertification is required. However, the following statements and labels must be included in the user manual of the end product.

9.1.1 Certification Statement

This product is classified as a Class 1 Laser Product under the EN/IEC 60825-1, Edition 3 (2014) internationally.

This product complies with FDA performance standards for laser products except for conformance with IEC 60825-1 Ed. 3 as described in Laser Notice No. 56, dated May 8, 2019.

9.1.2 Explanatory Label

This device complies with FDA performance standards for laser products except for conformance with IEC 60825-1 Ed. 3., as described in Laser Notice No. 56, dated May 8, 2019.

9.1.3 Cautionary Statements

System integrators should refer to their respective regulatory and compliance owner to finalize regulatory requirements for a specific geography.

Caution - Use of controls or adjustments or performance of procedures other than those specified herein may result in hazardous radiation exposure.

- Do not power on the product if any external damage was observed.
- Do not attempt to open any portion of this laser product. There are no user serviceable parts.
- Invisible laser radiation when opened. Avoid direct exposure to beam.
- There are no service/maintenance, modification, or disassembly procedures for the stereo module and infrared projector. The system integrator must either notify Intel or return modules before any failure analysis is performed.
- Modification or service of the stereo module, specifically the infrared projector, may cause the emissions to exceed Class 1.
- Do not try to update camera firmware that is not officially released for specific camera module SKU and revision.

9.1.4 US FDA Accession Number

Table 9-1. U.S. FDA Accession Number

Component	U.S. FDA accession numbers
Intel® RealSense™ Depth Module D410/D415/D430/D450	1420260
Intel® RealSense™ Depth Camera D415/D435/D435i/D455	1420260

This accession number should be entered into Box B.1 of the Food and Drug Administration (FDA) 2877 Declaration for Imported Electronic Products Subject to Radiation Control Standards.

9.2 Regulatory Compliance

9.2.1 Manufacturer's Information

Attn: Corp. Quality
Intel Corporation
2200 Mission College Blvd.
Santa Clara CA 95054-1549
USA

9.2.2 EU Single Place of Contact

Intel Deutschland GmbH
z. H. Corp. Quality

Am Campeon 10-12
85579 Neubiberg
GERMANY

9.2.3 UK Single Place of Contact

Intel Corporation (UK) Ltd.
Attn: Corp. Quality
Pipers Way
Swindon
Wiltshire
SN3 1RJ
UNITED KINGDOM

9.2.4 NRTL Statement

For the US and Canada market, this product has been tested and certified by UL and Nemko, and found to be compliant with all applicable requirements of the specifications below:

UL 60950-1 2nd Edition, CAN/CSA C22.2 No. 60950-1-07, Information Technology Equipment – Safety – Part 1: General Requirements

Both UL and Nemko are Nationally Recognized Testing Laboratories (NRTLs), recognized by US Occupational Safety and Health Administration (OSHA) as qualified to perform safety testing and certifications covered within its scope of recognition.

* Not applicable to D450, D401 modules and D455, D405 cameras.

Figure 9-1. NRTL Certifications

Intel® RealSense™ Depth Module
Intel® RealSense™ Vision Processor D4 Board

www.ul.com/database
NWGQ2.E466025, NWGQ8.E466025

Intel® RealSense™ Depth Camera

60950

https://www.nemko.com/certification/product-certification/certificates
Certificate #: NA201710801

9.2.5 FCC Part 15 Declaration of Conformity

Intel® RealSense™ Depth Camera D415, D435, D435i, D455

This device complies with part 15 of the FCC Rules. Operation is subject to the following two conditions: (1) This device may not cause harmful interference, and (2)

this device must accept any interference received, including interference that may cause undesired operation.

Attn: Corp. Quality, Intel Corporation: 2200Mission College Blvd, Santa Clara, CA 95054-1549, USA

This equipment has been tested and found to comply with the limits for a Class B digital device, pursuant to part 15 of the FCC Rules. These limits are designed to provide reasonable protection against harmful interference in a residential installation. This equipment generates, uses, and can radiate radio frequency energy and, if not installed and used in accordance with the instructions, may cause harmful interference to radio communications. However, there is no guarantee that interference will not occur in a particular installation. If this equipment does cause harmful interference to radio or television reception, which can be determined by turning the equipment off and on, the user is encouraged to try to correct the interference by one or more of the following measures:

- Reorient or relocate the receiving antenna.
- Increase the separation between the equipment and receiver.
- Connect the equipment into an outlet on a circuit different from that to which the receiver is connected.
- Consult the dealer or an experienced radio/TV technician for help.

Changes or modifications not expressly approved by the manufacturer could void the user's authority to operate the equipment.

CAUTION: To comply with the limits of the Class B digital device, pursuant to Part 15 of the FCC Rules, this device must be installed with computer equipment certified to comply with Class B limits. All cables used to connect to the computer and peripherals must be shielded and grounded. Operation with non-certified computers or non-shielded cables may result in interference to radio or television reception.

9.2.6 Canada

CAN ICES-3 (B)/NMB-3(B)

This digital apparatus does not exceed the Class B limits for radio noise emissions from digital apparatus set out in the Interference-Causing Equipment Standard ICES-003.

Le présent appareil numerique német pas de bruits radio électriques dépassant les limites applicables aux appareils numériques de la classe B prescrites dans la présente norme sur le matériel brouilleur, NMB-003.

9.2.7 European Directives

This product complies with all applicable European directives.

CAUTION: To keep the product in compliance with the European CE requirement, the device must be installed with CE certified computer equipment which meets the Class B limits. Operation with non-certified computers or incorrect cables may result in interference to other devices or undesired effect to the product.

9.2.8 UK

This product complies with all applicable UK regulations.

Due to the very small size of the product, the marking has been placed in this datasheet.

9.2.9 Australia

Due to the very small size of the product, the marking has been placed in this datasheet.

9.2.10 Japan

この装置は、クラスＢ機器です。この装置は、住宅環境で使用することを目的としていますが、この装置がラジオやテレビジョン受信機に近接して使用されると、受信障害を引き起こすことがあります。 取扱説明書に従って正しい取り扱いをして下さい。　　ＶＣＣＩ－Ｂ

This device is a Class B information technology device. This device is intended for use in a home environment, but if this device is used close to a radio or television receiver it may cause reception interference. Please handle according to the instruction manual correctly. VCCI-B

9.2.11 South Korea

인증 번호: MSIP-REM-CPU-D415C, MSIP-REM-CPU-D435C, R-R-CPU-D435iC, R-R-CPU-D455C, R-R-CPU-D405C
제조자: Intel Corporation
상품명: Intel® RealSense™ Depth Camera
모델: D415, D435, D435i, D455, D405
제조국: 태국, 중국

인증 번호: R-REM-CPU-D410, R-REM-CPU-D415, R-REM-CPU-D430, R-R-CPU-D450, R-R-CPU-D401
제조자: Intel Corporation
상품명: Intel® RealSense™ Depth Module
모델: D410, D415, D430, D450, D401
제조국: 중국

인증 번호: R-REM-CPU-D4BOARD
제조자: Intel Corporation
상품명: Intel® RealSense™ Vision Processor Card
모델: D4BOARD
제조국: 중국

9.2.12 Customs Union

Наименование продукции: Intel® RealSense™ Depth Camera
Модель: D415, D435, D435i, D455, D405, D401
Производитель: Intel Corporation
Сделано в Таиланде, Китае

9.3 Ecology Compliance

9.3.1 China RoHS Declaration

intel. Declaration **China RoHS**

产品中有毒有害物质的名称及含量
Hazardous Substances Table

部件名称 Component Name	有毒有害物质或元素 Hazardous Substance					
	铅 Pb	汞 Hg	镉 Cd	六价铬 Cr (VI)	多溴联苯 PBB	多溴二苯醚 PBDE
相机 Camera	○	○	○	○	○	○
印刷电路板组件 Printed Board Assemblies	X	○	○	○	○	○
三角架 Tripod	○	○	○	○	○	○
电缆 Cable	○	○	○	○	○	○

○：表示该有毒有害物质在该部件所有均质材料中的含量均在GB/T 26572标准规定的限量要求以下。

○：Indicates that this hazardous substance contained in all homogeneous materials of such component is within the limits specified in GB/T 26572.

×：表示该有毒有害物质至少在该部件的某一均质材料中的含量超出GB/T 26572标准规定的限量要求。

×： Indicates that the content of such hazardous substance in at least a homogeneous material of such component exceeds the limits specified in GB/T 26572. 对销售之日的所售产品,本表显示我公司供应链的电子信息产品可能包含这些物质。注意：在所售产品中可能会也可能不会含有所有所列的部件。 This table shows where these substances may be found in the supply chain of our electronic information products, as of the date of sale of the enclosed product. Note that some of the component types listed above may or may not be a part of the enclosed product.
除非另外特别的标注,此标志为针对所涉及产品的环保使用期限标志. 某些可更换的零部件可能会有一个不同的环保使用期限(例如,电池单元模块). 此环保使用期限只适用于产品在产品手册中所规定的条件下工作.   The Environment-Friendly Use Period (EFUP) for all enclosed products and their parts are per the symbol shown here, unless otherwise marked. Certain field-replaceable parts may have a different EFUP (for example, battery modules) number. The Environment-Friendly Use Period is valid only when the product is operated under the conditions defined in the product manual.

9.3.2 Waste Electrical and Electronic Equipment (WEEE)

"In the EU, this symbol means that this product must not be disposed of with household waste. It is your responsibility to bring it to a designated collection point for the recycling of waste electrical and electronic equipment. For more information, contact the local waste collection center or your point of purchase of this product."

9.3.3 Turkey

Türkiye Cumhuriyeti: EEE Yönetmeliğine Uygundur

§ §

10 Mechanical Drawings

Figure 10-1. Intel® RealSense™ Depth Module D410

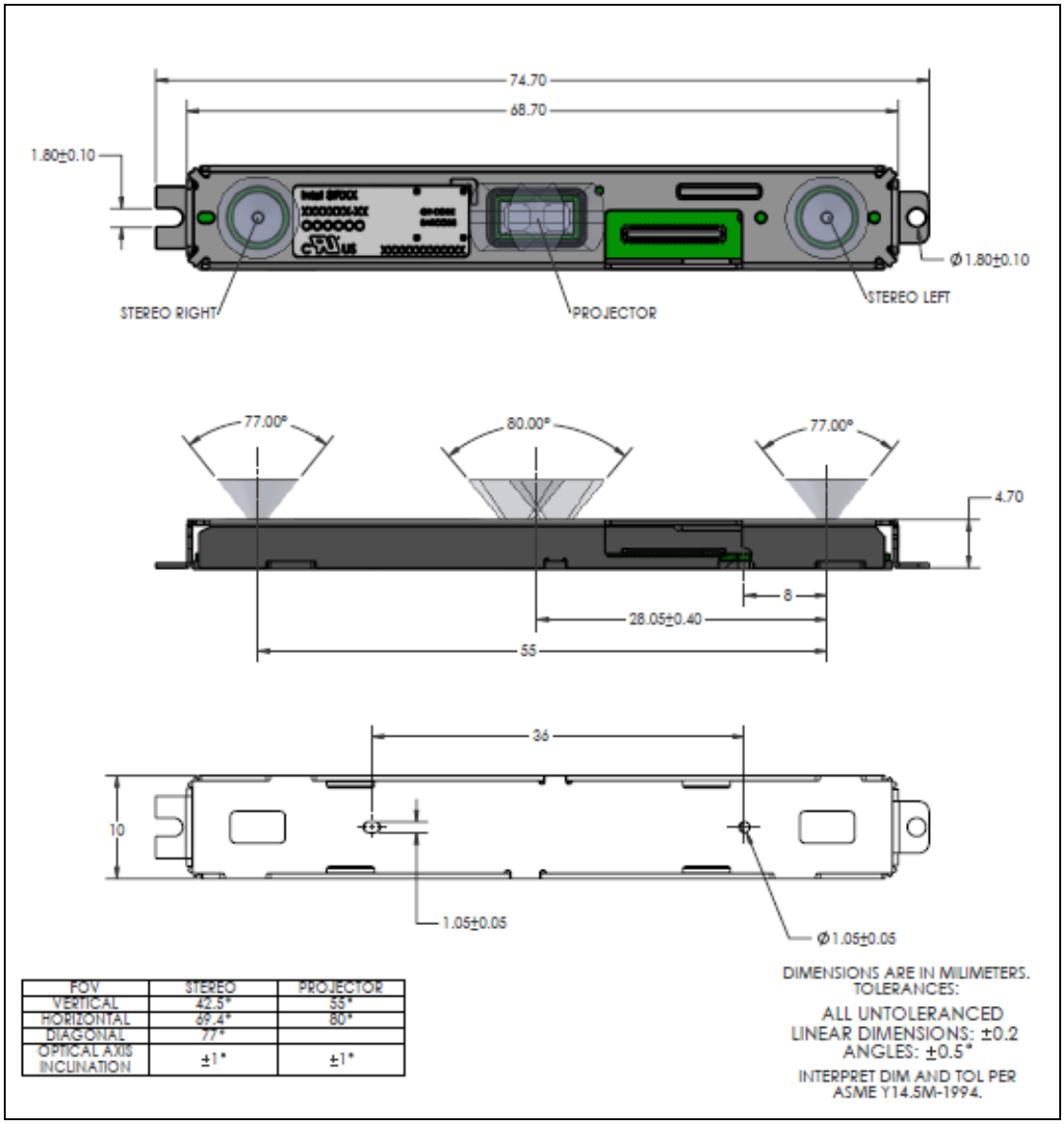

FOV	STEREO	PROJECTOR
VERTICAL	42.5°	55°
HORIZONTAL	69.4°	80°
DIAGONAL	77°	
OPTICAL AXIS INCLINATION	±1°	±1°

Figure 10-2. Intel® RealSense™ Depth Module D415

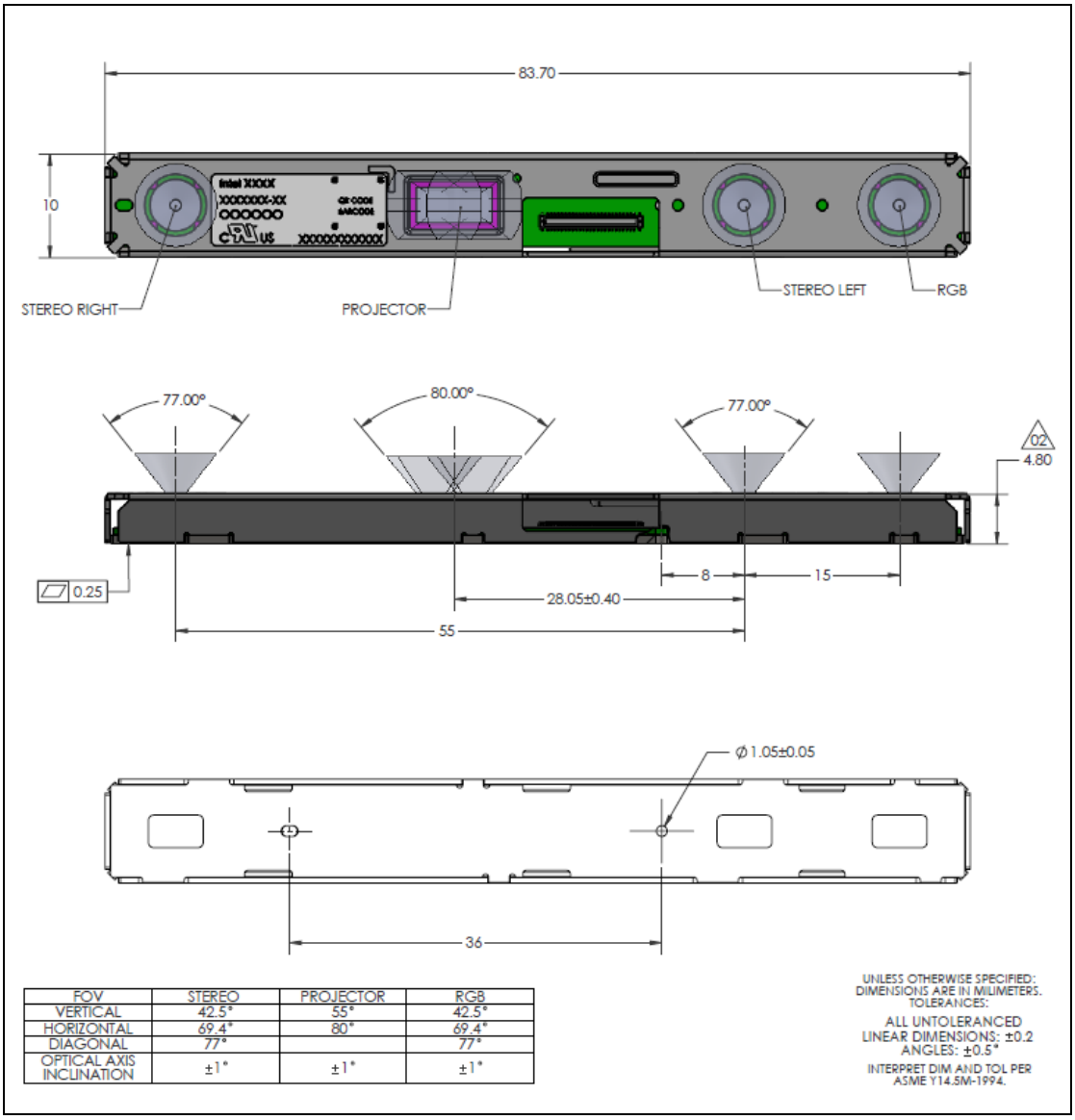

FOV	STEREO	PROJECTOR	RGB
VERTICAL	42.5°	55°	42.5°
HORIZONTAL	69.4°	80°	69.4°
DIAGONAL	77°		77°
OPTICAL AXIS INCLINATION	±1°	±1°	±1°

Figure 10-3. Intel® RealSense™ Depth Module D430

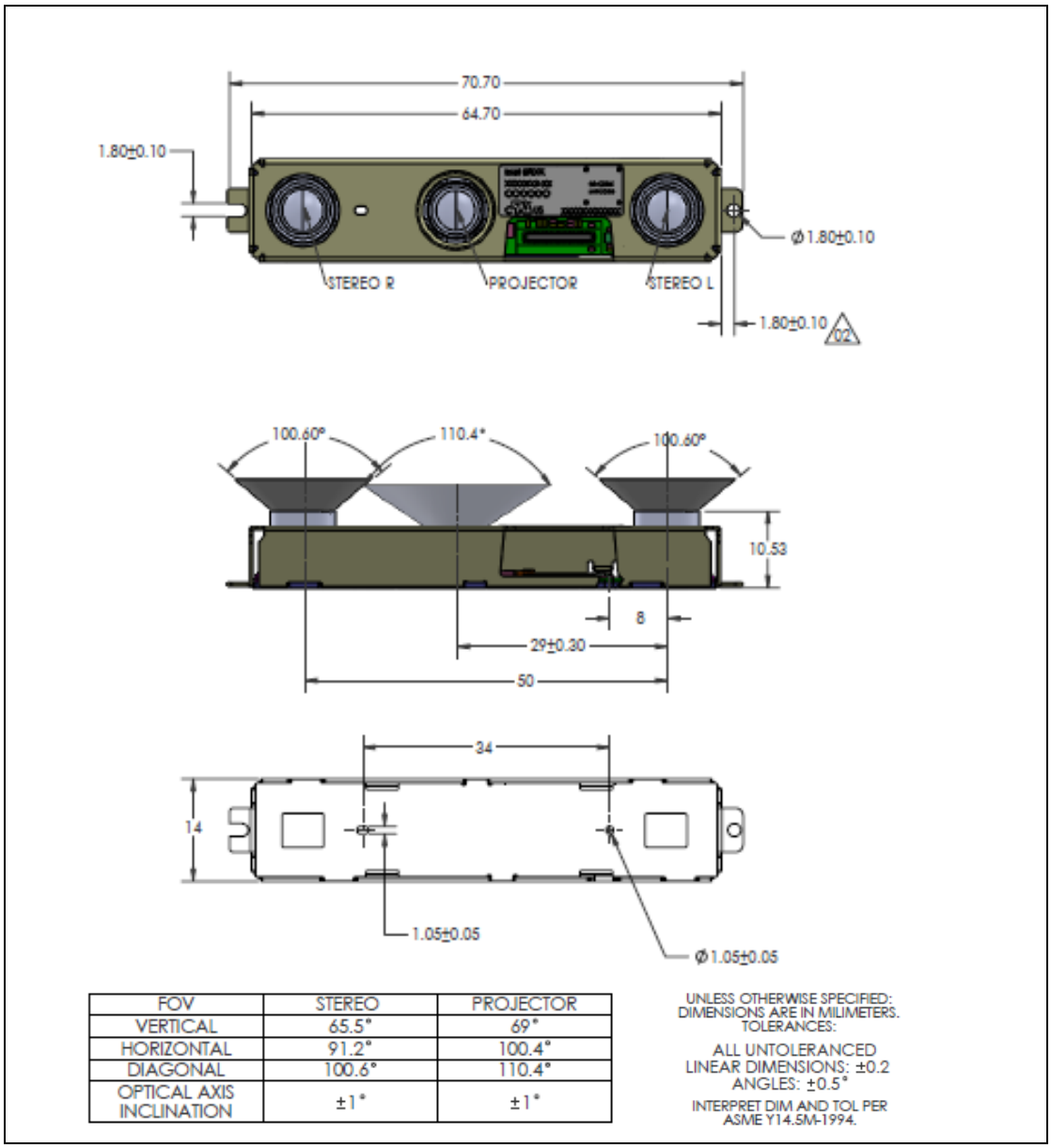

FOV	STEREO	PROJECTOR
VERTICAL	65.5°	69°
HORIZONTAL	91.2°	100.4°
DIAGONAL	100.6°	110.4°
OPTICAL AXIS INCLINATION	±1°	±1°

Figure 10-4. Intel® RealSense™ Depth Module D450

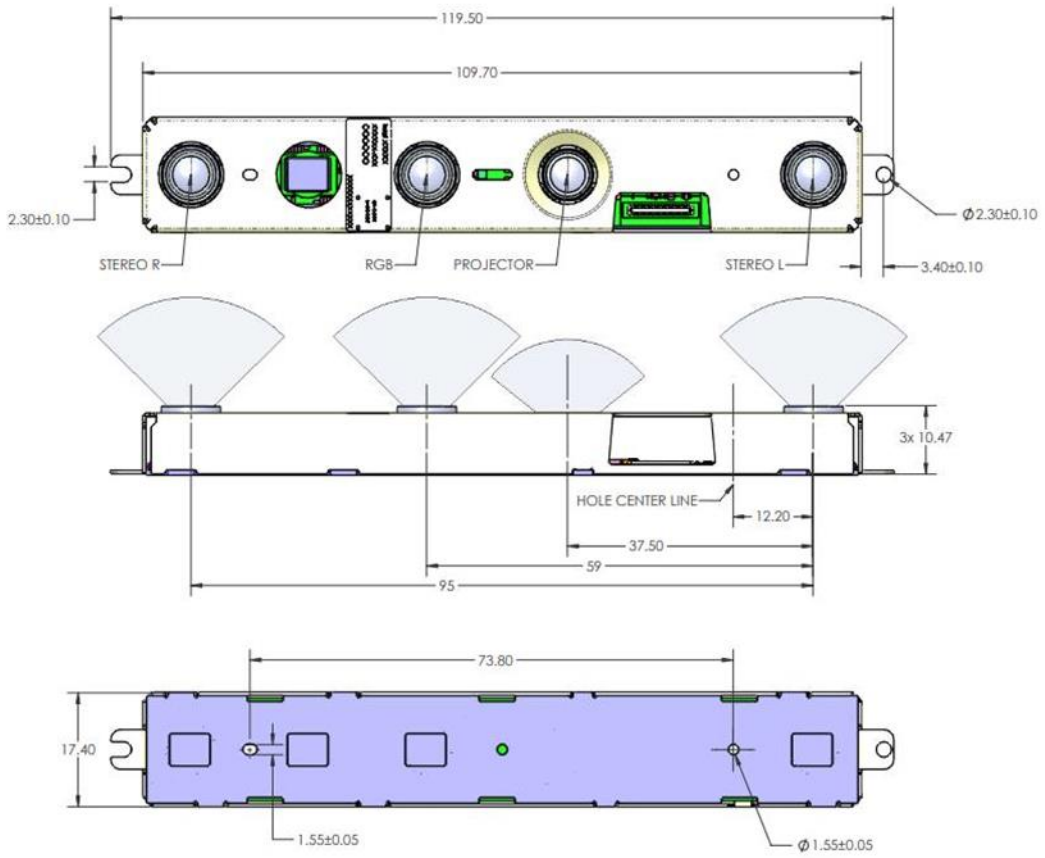

FOV	STEREO	RGB	PROJECTOR
VERTICAL	65.5°	65.5°	69°
HORIZONTAL	91.2°	91.2°	100.4°
DIAGONAL	100.6°	100.6°	110.4°
OPTICAL AXIS INCLINATION	±1°	±1°	±1°

Figure 10-5. Intel® RealSense™ Depth Module D401

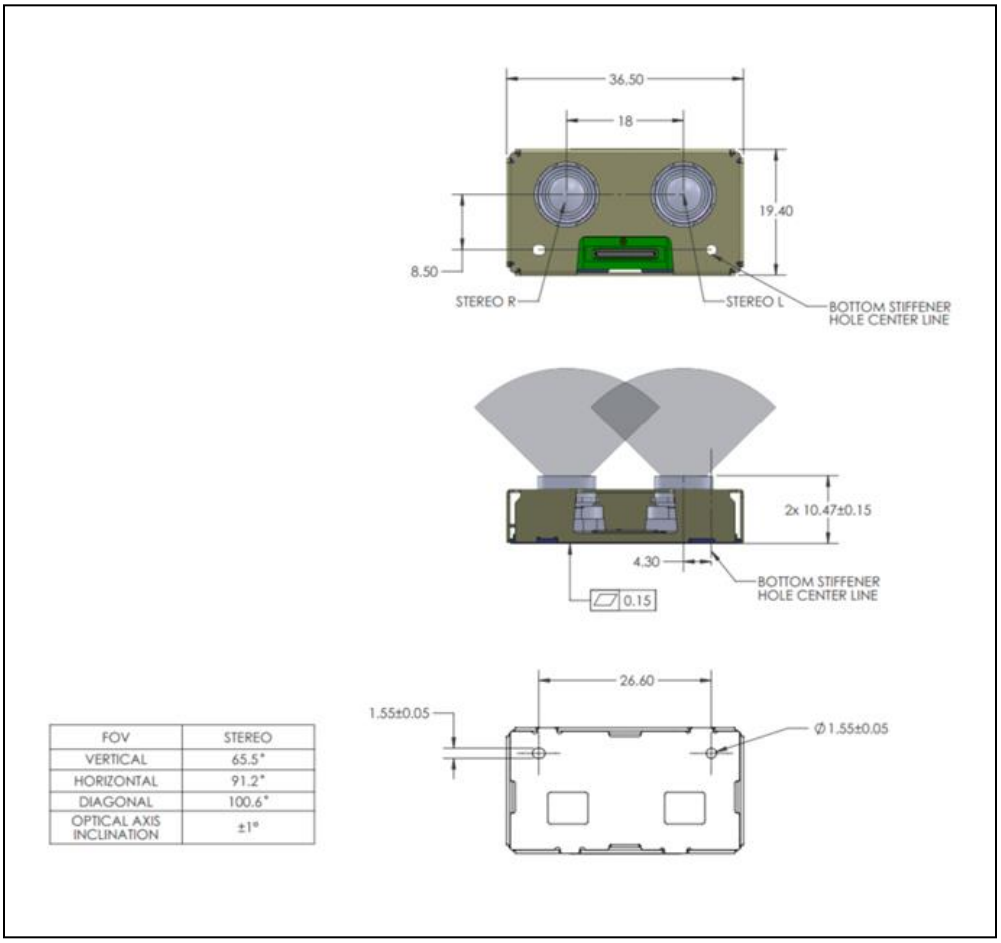

FOV	STEREO
VERTICAL	65.5°
HORIZONTAL	91.2°
DIAGONAL	100.6°
OPTICAL AXIS INCLINATION	±1°

Figure 10-6. Vision Processor D4 Board USB Type-C (Intel® RealSense™ Vision Processor D4 Board – V1 and V3)

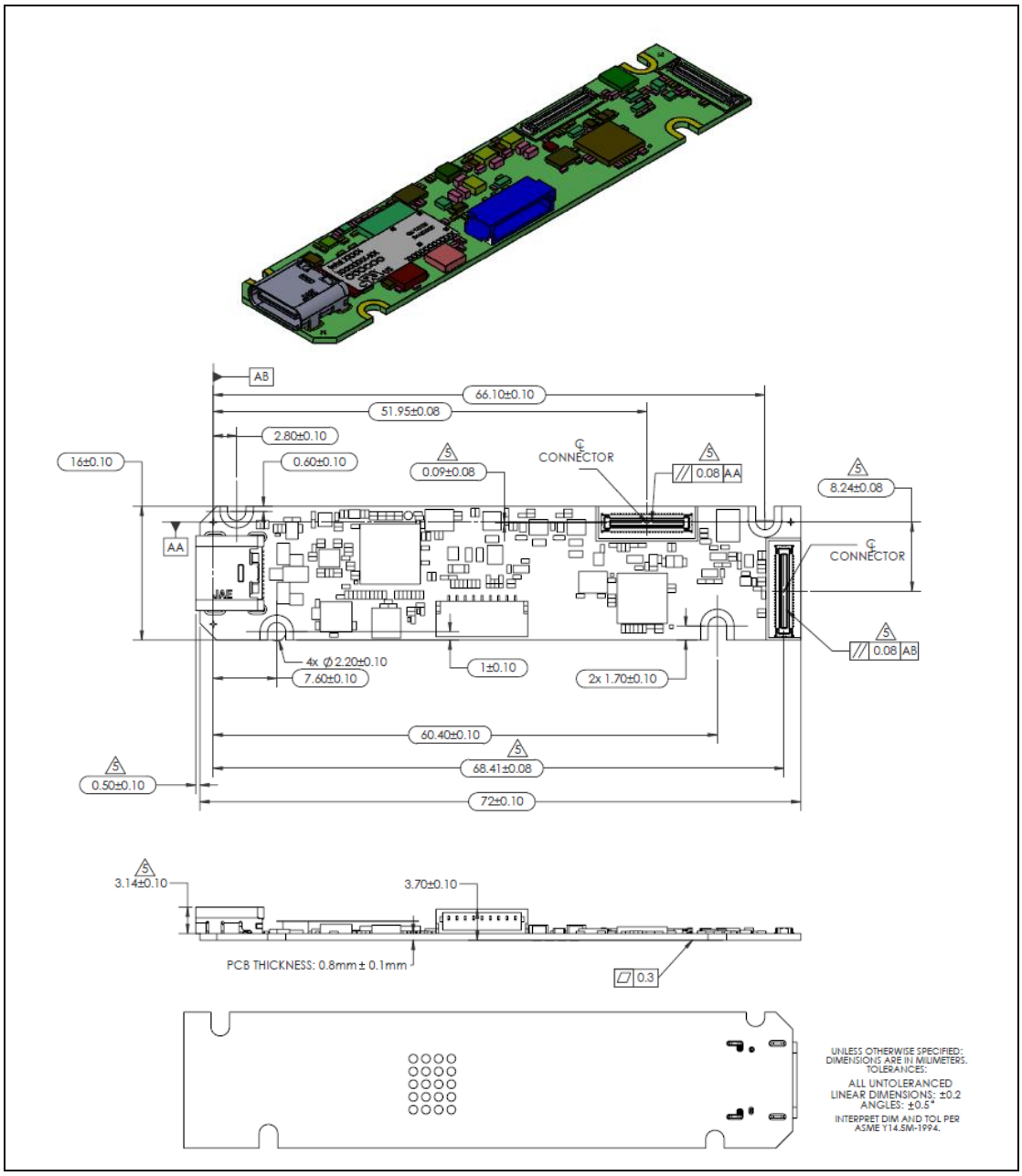

Figure 10-7. Vision Processor D4 Board USB Micro-B (Intel® RealSense™ Vision Processor D4 Board – V4)

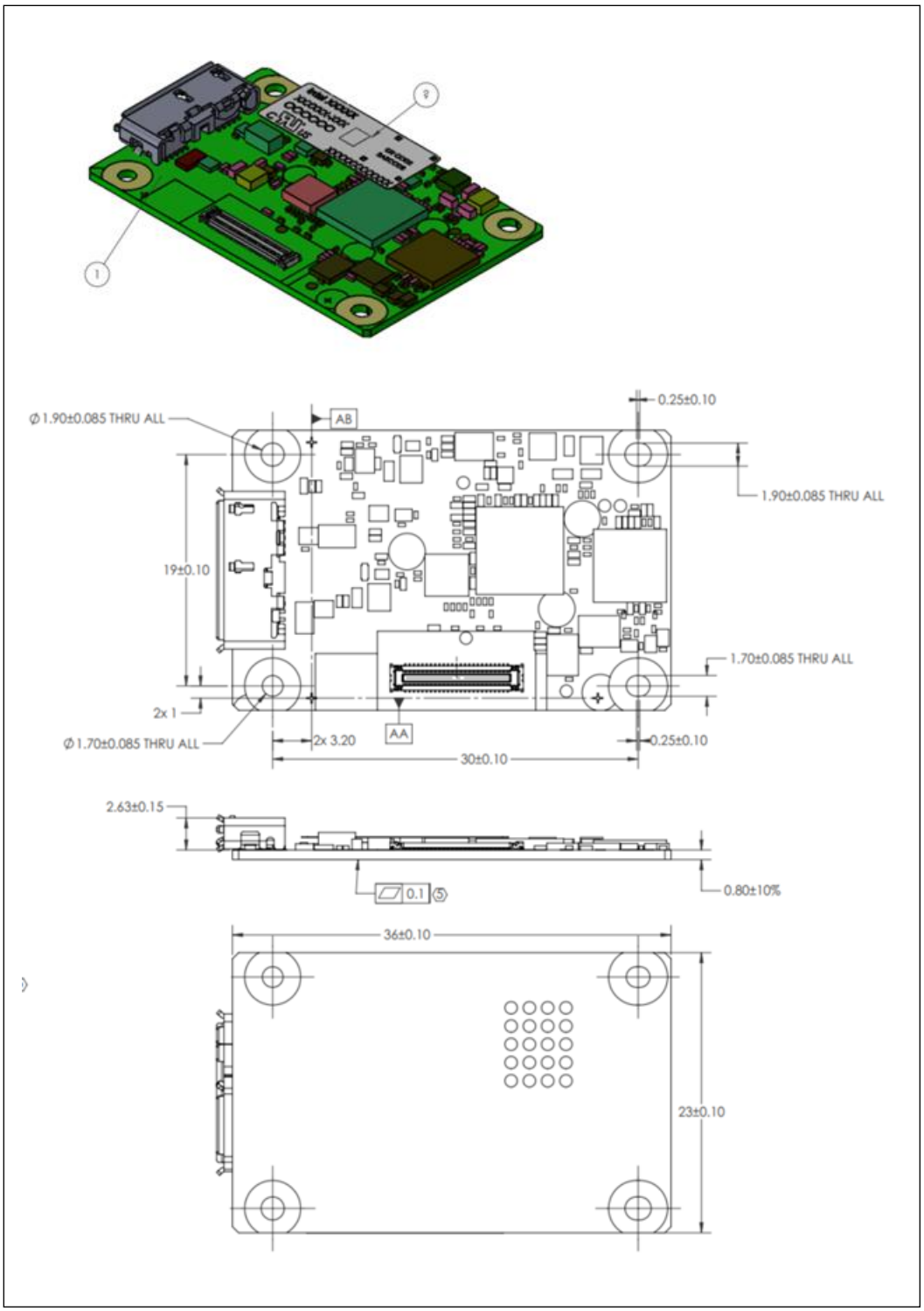

Figure 10-8. Intel® RealSense™ Depth Camera D415

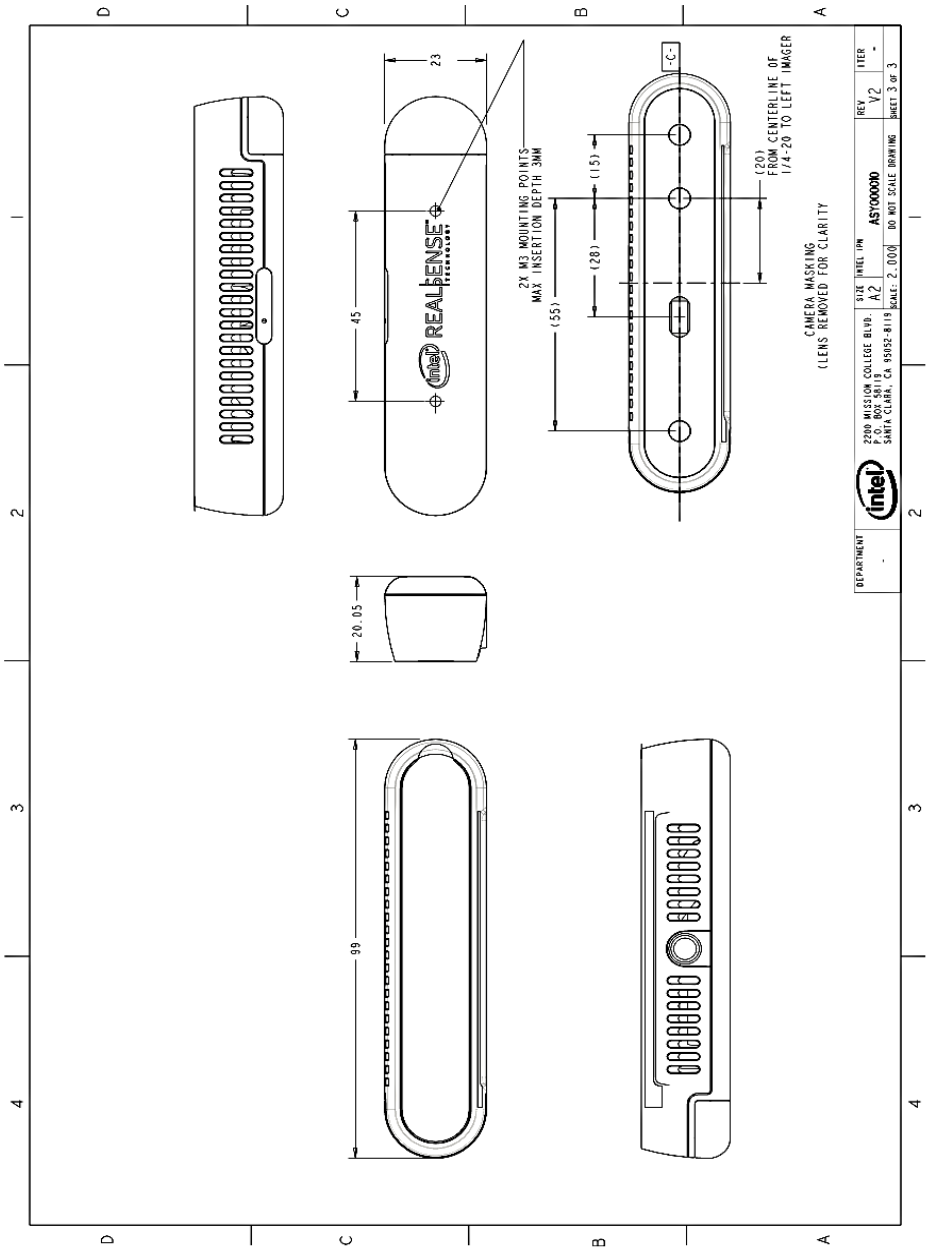

Note: Recommended torque for both M3 mounting points is 0.4 Nm

Figure 10-9. Intel® RealSense™ Depth Camera D435/D435i

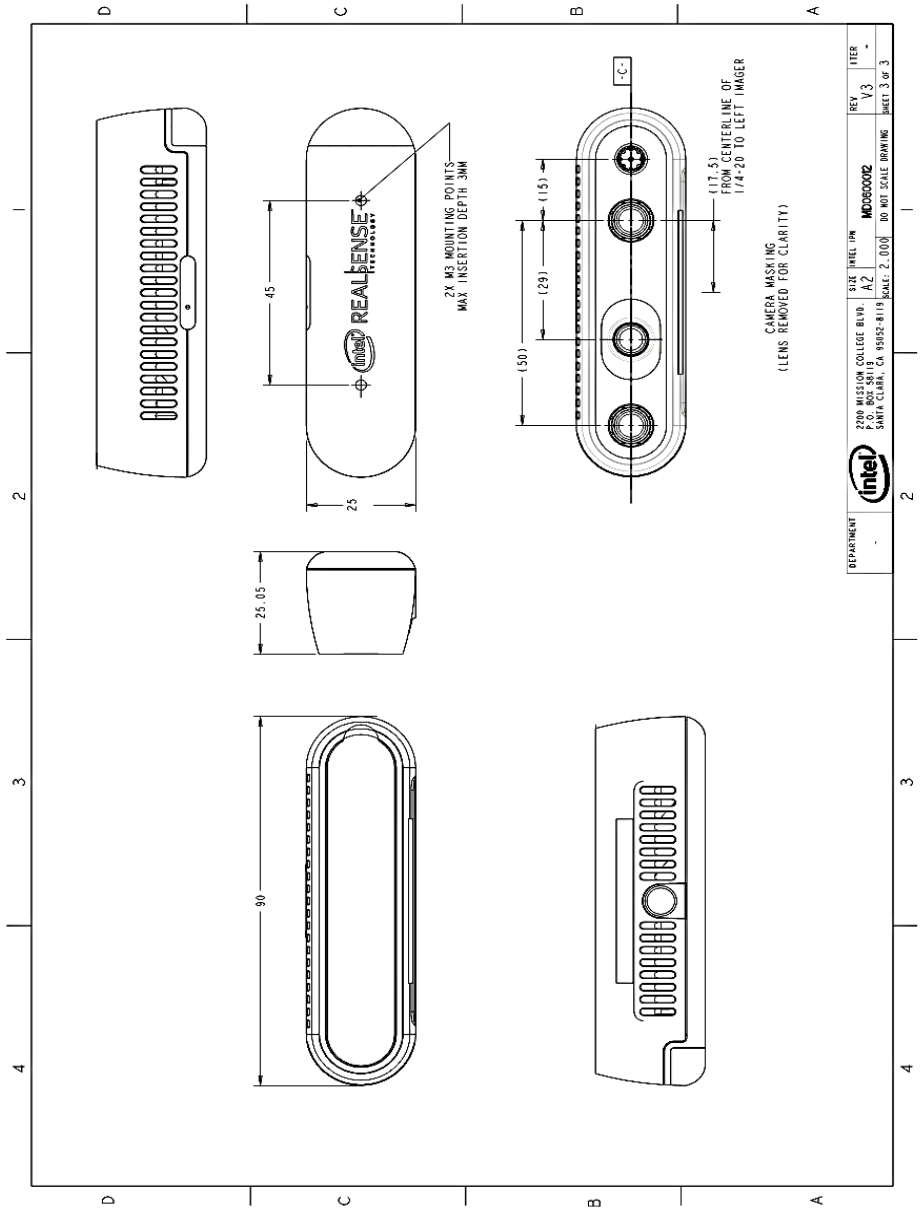

Note: Recommended torque for both M3 mounting points is 0.4 Nm

Figure 10-10. Intel® RealSense™ Depth Camera D435f NIR Filter

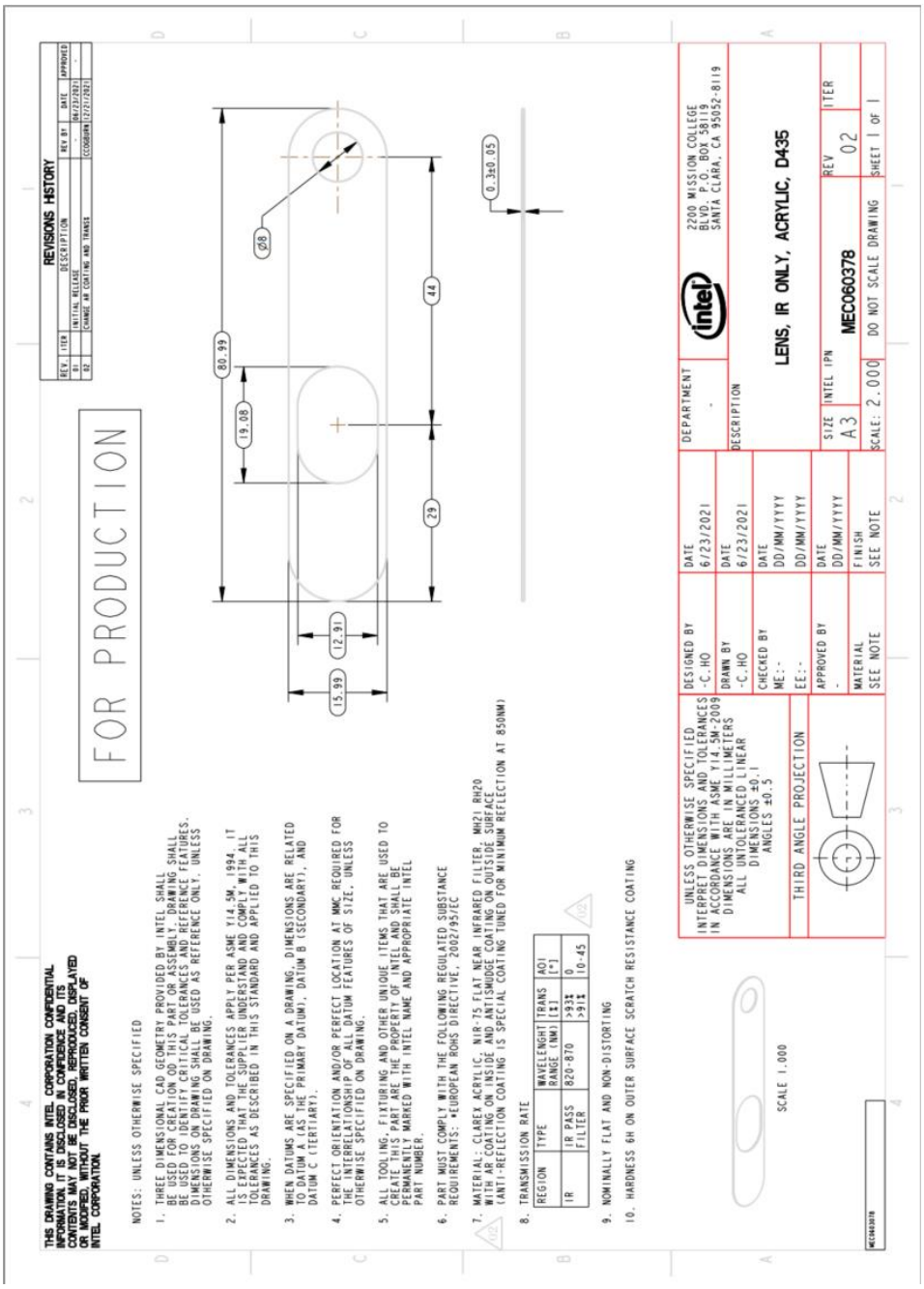

Figure 10-10. Intel® RealSense™ Depth Camera D455

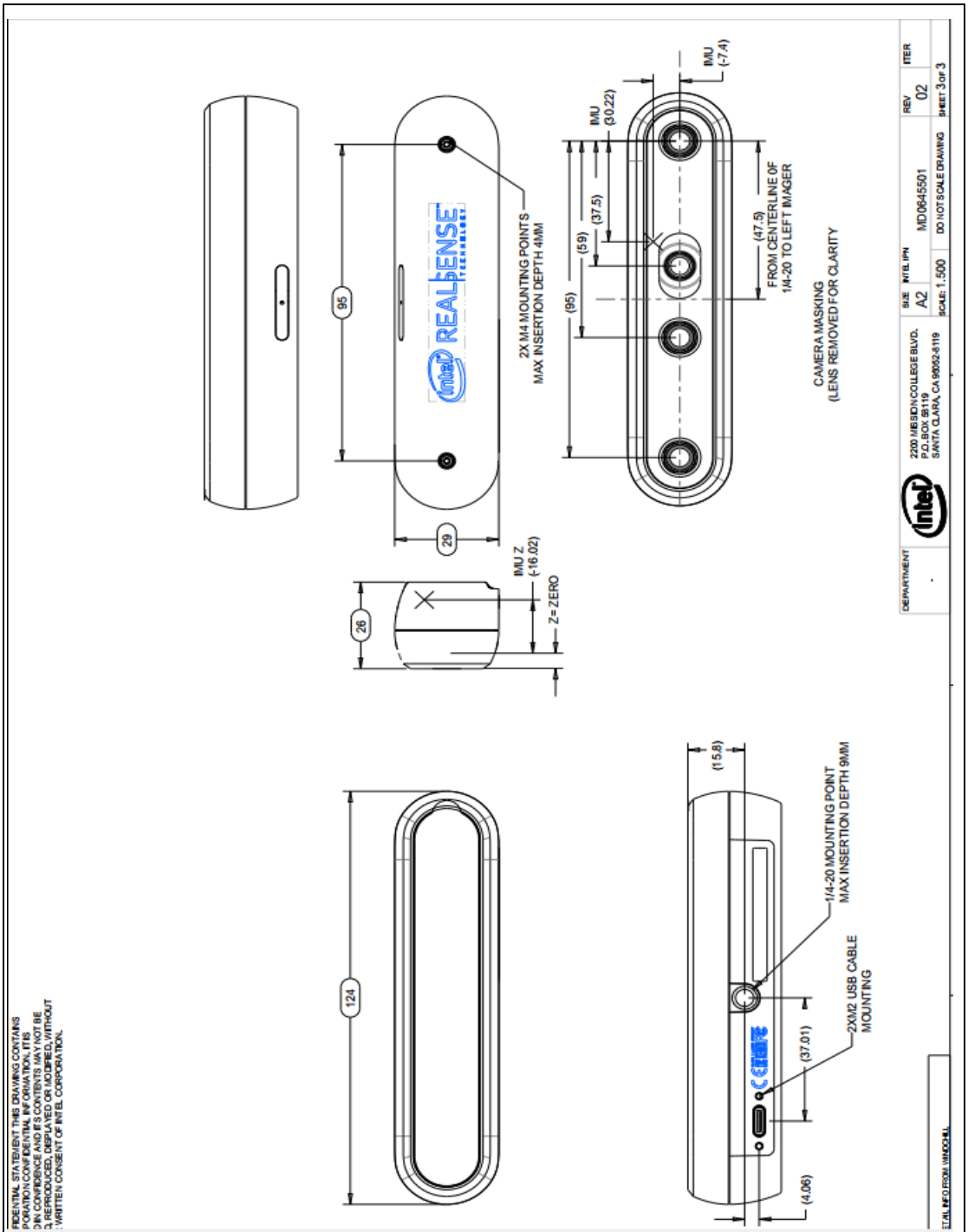

Note: Recommended torque for both M4 mounting points is 0.4 Nm

Figure 10-11. Intel® RealSense™ Depth Camera D405

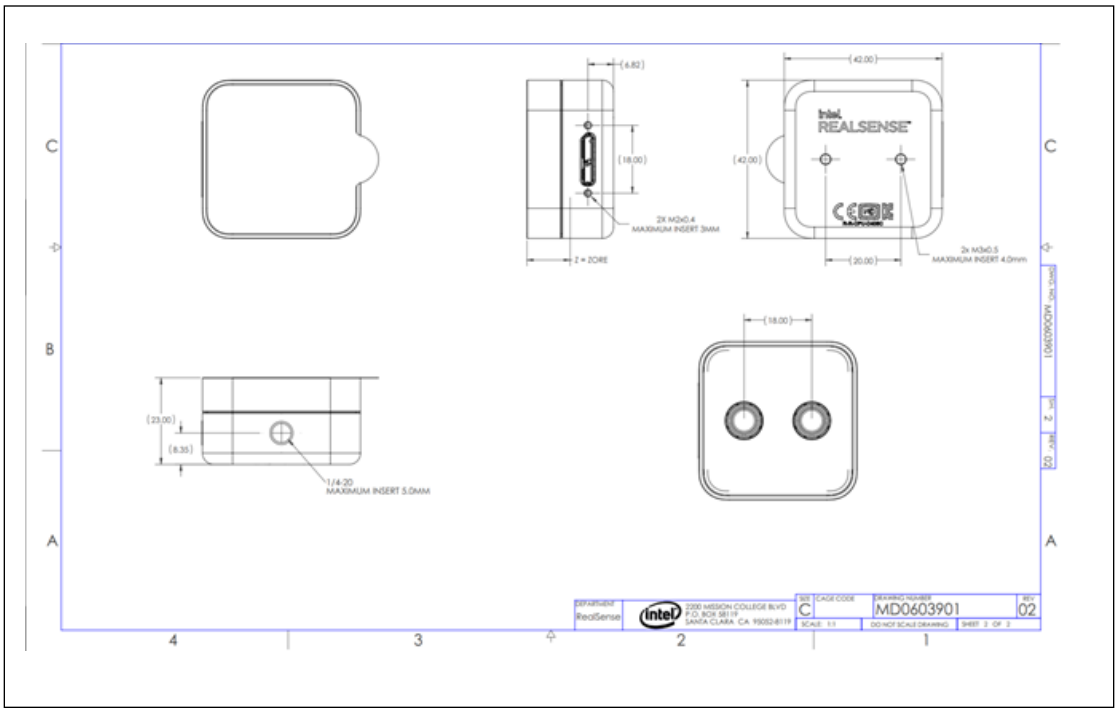

11 Connector Drawings

Figure 11-1. Receptacle Mechanical Drawing (50-Pin Depth Module Receptacle)

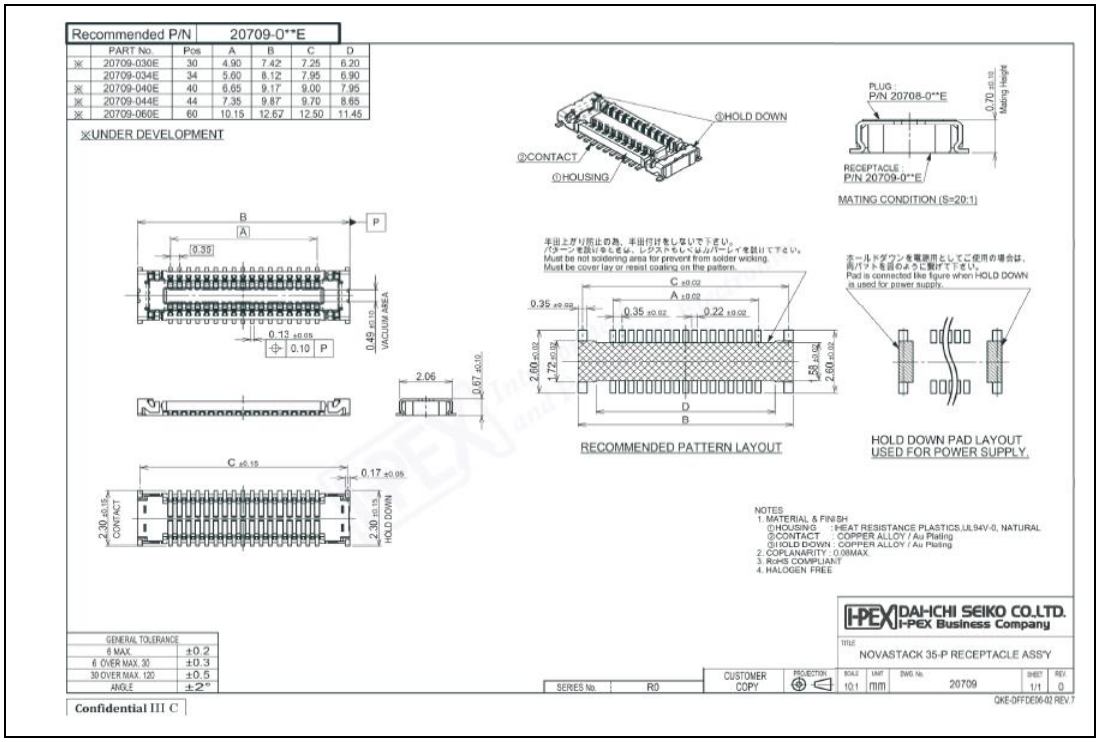

Figure 11-2. Plug Mechanical Drawing (50-Pin Depth Module Plug)

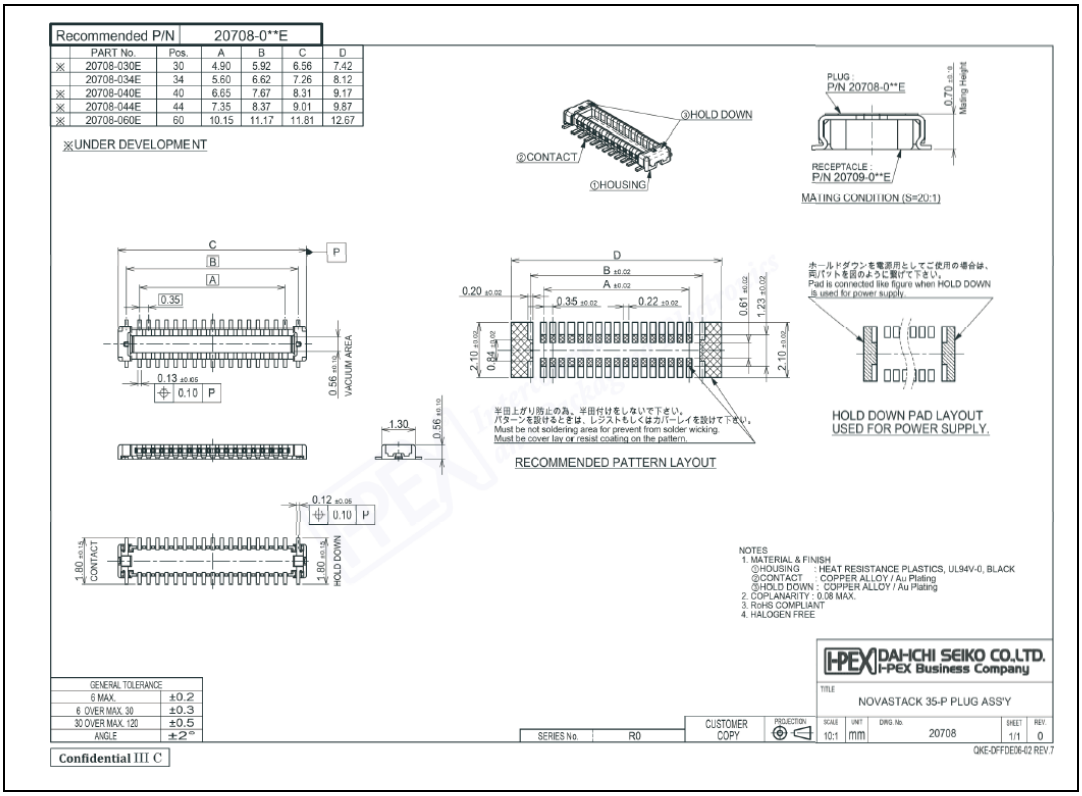

12 Appendix A – Vision Processor D4 on Motherboard Schematic Checklist

The following checklist should be compared to the D4 on motherboard design.

Table 12-1. Vision Processor D4 on Motherboard Schematic Checklist

Note:

1. Vision Processor D4 Ball Out and Signal Listing lists additional interfaces and signal pins that are not supported in current D4 camera system. These pins are called out as **RESERVED**.

Definitions:

- **Stuff** = Component is populated
- **No Stuff** = Component is not populated

Signal Name	Pad	Connection	√
HOST MIPI			
H_DATAP0	B04	No Connect	
H_DATAN0	A05	No Connect	
H_DATAP1	B05	No Connect	
H_DATAN1	A06	No Connect	
H_DATAP2	B07	No Connect	
H_DATAN2	A08	No Connect	
H_DATAP3	B08	No Connect	
H_DATAN3	A09	No Connect	
H_CLKP	B06	No Connect	
H_CLKN	A07	No Connect	
H_SDA	B03	No Connect	
H_SCL	A04	No Connect	
H_REXT	C05	6.04K 1% resistor pull down to GND. (This resistor should be placed as close to ASIC as possible)	
IMAGER A MIPI (Stereo Depth Left Imager Interface)			
A_DATAP0	P03	Routed to Stereo Depth Receptacle Pin 16	

Signal Name	Pad	Connection	√
A_DATAN0	R02	Routed to Stereo Depth Receptacle Pin 18	
A_DATAP1	P05	Routed to Stereo Depth Receptacle Pin 28	
A_DATAN1	R04	Routed to Stereo Depth Receptacle Pin 30	
A_CLKP	P04	Routed to Stereo Depth Receptacle Pin 22	
A_CKLN	R03	Routed to Stereo Depth Receptacle Pin 24	
A_SDA	N01	Routed to Stereo Depth Receptacle Pin 41 with 2.2K pull up to 1.8V	
A_SCL	N02	Routed to Stereo Depth Receptacle Pin 39 with 2.2K pull up to 1.8V	
A_RCLK	P02	Routed to Stereo Depth Receptacle Pin 27	
A_PDOWN	N03	No Connect	
A_VSYNC	M01	Routed to Stereo Depth Receptacle Pin 23	
A_RESETN	P01	Routed to Stereo Depth Receptacle Pin 31	
A_REXT	N04	6.04K 1% resistor pull down to GND. (This resistor should be placed as close to ASIC as possible)	
IMAGER B MIPI (Reserved)			
B_DATAP0	B11	No Connect	
B_DATAN0	A12	No Connect	
B_DATAP1	B09	No Connect	
B_DATAN1	A10	No Connect	
B_CLKP	B10	No Connect	
B_CKLN	A11	No Connect	
B_SDA	C12	No Connect	
B_SCL	B12	No Connect	
B_RCLK	C07	No Connect	
B_PDOWN	C09	No Connect	
B_VSYNC	C08	No Connect	
B_RESETN	C10	No Connect	
B_REXT	C11	6.04K 1% resistor pull down to GND. (This resistor should be placed as close to ASIC as possible)	

Signal Name	Pad	Connection	√
IMAGER M MIPI (Stereo Depth Right Imager)			
M_DATAP0	P08	Routed to Stereo Depth Receptacle Pin 34	
M_DATAN0	R07	Routed to Stereo Depth Receptacle Pin 36	
M_DATAP1	P10	Routed to Stereo Depth Receptacle Pin 46	
M_DATAN1	R09	Routed to Stereo Depth Connector Pin 48	
M_CLKP	P09	Routed to Stereo Depth Receptacle Pin 40	
M_CKLN	R08	Routed to Stereo Depth Receptacle Pin 42	
M_SDA	P06	Routed to External Sensor Sync Connector Pin 6 through 2.2K pull up to 1.8V	
M_SCL	R05	Routed to External Sensor Sync Connector Pin 7 through 2.2K pull up to 1.8V	
M_RCLK	R06	Routed to Stereo Depth Receptacle Pin 37	
M_PDOWN	P07	No Connect	
M_VSYNC	N06	No Connect	
M_RESETN	N07	No Connect	
M_REXT	M06	6.04K 1% resistor pull down to GND. (This resistor should be placed as close to ASIC as possible)	
IMAGER Y MIPI (Color ISP)			
Y_DATAP0	C14	Routed to Color ISP (Intel® Vision Processor D4 Board) or No Connect	
Y_DATAN0	B15	Routed to Color ISP (Intel® Vision Processor D4 Board) or No Connect	
Y_DATAP1	B13	Routed to Color ISP (Intel® Vision Processor D4 Board) or No Connect	
Y_DATAN1	A13	Routed to Color ISP (Intel® Vision Processor D4 Board) or No Connect	
Y_CLKP	B14	Routed to Color ISP (Intel® Vision Processor D4 Board) or No Connect	
Y_CKLN	A14	Routed to Color ISP (Intel® Vision Processor D4 Board) or No Connect	
Y_SDA	E14	Routed to Color ISP (Intel® Vision Processor D4 Board) or No Connect	
Y_SCL	D15	Routed to Color ISP (Intel® Vision Processor D4 Board) or No Connect	
Y_RCLK	D14	Routed to Color ISP (Intel® Vision Processor D4 Board) or No Connect	

Signal Name	Pad	Connection	√
Y_PDOWN	E13	No Connect	
Y_VSYNC	F13	Routed as RGB_FSYNC to Stereo Depth Receptacle Pin 7 through 0 ohm **stuff** resistor. Alternately also as routed as RGB_STROBE to Stereo Depth Receptacle Pin 9 through 0 ohm **no stuff** resistor.	
Y_RESETN	F14	Routed to Color ISP (Intel® Vision Processor D4 Board) or No Connect	
Y_REXT	C15	6.04K 1% resistor pull down to GND. (This resistor should be placed as close to ASIC as possible)	
IMAGER Z MIPI (Reserved)			
Z_DATAP0	P13	No Connect	
Z_DATAN0	R12	No Connect	
Z_DATAP1	P11	No Connect	
Z_DATAN1	R10	No Connect	
Z_CLKP	P12	No Connect	
Z_CKLN	R11	No Connect	
Z_SDA	N13	No Connect	
Z_SCL	N12	No Connect	
Z_RCLK	R13	No Connect	
Z_PDOWN	N11	No Connect	
Z_VSYNC	R14	Depth VSYNC - Routed to External Sensor Sync Connector Pin 5	
Z_RESETN	P14	No Connect	
Z_REXT	N10	6.04K 1% resistor pull down to GND. (This resistor should be placed as close to ASIC as possible)	
SPI (SERIAL FLASH MEMORY)			
SPI_DI	N14	Routed to 16 Mbit SERIAL FLASH MEMORY (IS25WP016 pin 5 or equivalent)	
SPI_DO	N15	Routed to 16 Mbit SERIAL FLASH MEMORY (IS25WP016 pin 2 or equivalent)	
SPI_CLK	M14	Routed to 16 Mbit SERIAL FLASH MEMORY (IS25WP016 pin 6 or equivalent)	
SPI_CS	M13	Routed to 16 Mbit SERIAL FLASH MEMORY (IS25WP016 pin 1 or equivalent)	
SPI_WP	M15	Routed to 16 Mbit SERIAL FLASH MEMORY (IS25WP016 pin 3 or equivalent	

Signal Name	Pad	Connection	√
GPIO			
GPIO[0]	E15	No Connect if not used.	
GPIO[1]	F15	No Connect if not used.	
GPIO[2]	G14	LASER_PWM - Routed to Stereo Depth Receptacle pin 43 with 0 ohm **no stuff** resistor. Refer to LASER_PWM platform implementation schematic in Figure 10-1. Laser PWM0 is routed to Stereo Depth Receptacle Pin 43 through 0 ohm **stuff** resistor. Laser PWM1 is routed to Stereo Depth Receptacle Pin 47	
GPIO[3]	H14	GVSYNC0 - Routed to External Sensor Sync Connector Pin 1	
GPIO[4]	G13	GVSYNC1 - Routed to External Sensor Sync Connector pin 2 through 0 ohm stuff resistor with optional LASER_PWRDN through 0 ohm **no stuff** resistor or No Connect if not used.	
GPIO[5]	G15	GVSYNC2 - Routed to External Sensor Sync Connector pin 3 through 0 ohm stuff resistor with optional FLAGB through 0 ohm **no stuff** resistor or No Connect if not used.	
GPIO[6]	H15	GVSYNC3 - Routed to External Sensor Sync Connector pin 4 through 0 ohm stuff resistor with optional LASER_PWM through 0 ohm **no stuff** resistor or No Connect if not used.	
GPIO[7]	H13	Routed to Stereo Depth Receptacle Pin 21 or No Connect if not used.	
EGPIO[0]	L01	FLAGB - Routed to Stereo Depth Connector Receptacle Pin 49 with pull up option to 1.8 V with 0 ohm **no stuff** resistor	
EGPIO[1]	E03	Pull up option to 1.8 V with 0 ohm **no stuff** resistor	
EGPIO[2]	K01	Pull up option to 1.8 V with 0 ohm **no stuff** resistor	
EGPIO[3]	L02	LASER_PWRDN - Routed to Stereo Depth Connector Receptacle Pin 45 with pull up option to 1.8 V with 0 ohm **no stuff** resistor	
EGPIO[4]	M02	Pull up to 1.8 V with 4.99K resistor	
EGPIO[5]	J02	Pull down option to GND with 0 Ohms no stuff resistor	
EGPIO[6]	D01	Pull up option to 1.8 V with 0 ohm **no stuff** resistor	
EGPIO[7]	E01	Pull down to GND with 4.99K resistor	
EGPIO[8]	F01	ISP_FCS – Color ISP EEPROM Chip Select. Also pulled up to 1.8 V with 4.99K resistor	

Signal Name	Pad	Connection	√
EGPIO[9]	E02	Pull up option to 1.8 V with 0 ohm **no stuff** resistor	
EGPIO[10]	J01	Pull up option to 1.8 V with 4.99K **no stuff** resistor	
EGPIO[11]	F03	Pull up option to 1.8 V with 4.99K **no stuff** resistor	
EGPIO[12]	K02	Pull up option to 1.8 V with 4.99K **no stuff** resistor	
EGPIO[13]	F02	Pull up option to 1.8 V with 0 ohm **no stuff** resistor	
USB			
USB_RXP	B02	Intel® Vision Processor D4 Board supports USB Type-C connection to Host USB. Route as appropriate connection to Host USB	
USB_RXN	A03	Intel® Vision Processor D4 Board supports USB Type-C connection to Host USB. Route as appropriate connection to Host USB.	
USB_TXP	B01	Intel® Vision Processor D4 Board supports USB Type-C connection to Host USB. Route as appropriate connection to Host USB.	
USB_TXN	A02	Intel® Vision Processor D4 Board supports USB Type-C connection to Host USB. Route as appropriate connection to Host USB.	
USB_DP	D03	Intel® Vision Processor D4 Board supports USB Type-C connection to Host USB. Route as appropriate connection to Host USB.	
USB_DN	D02	Intel® Vision Processor D4 Board supports USB Type-C connection to Host USB. Route as appropriate connection to Host USB.	
USB_ID	E05	Intel® Vision Processor D4 Board supports USB Type-C connection to Host USB. Route as appropriate connection to Host USB.	
USB_RESREF	E04	200 ohm pull down to GND. (This resistor should be placed as close to ASIC as possible)	
MISCELLANIOUS			
LD_ON_OUT_XX	K13	(RESERVED) No Connect	
MODSTROB	J15	(RESERVED) No Connect	
MODSIGN	J14	(RESERVED) No Connect	
LD_ERR	J13	Connected to FF_RSTn (schematic)	
CLKXI	G1	24 MHz XTAL. Refer to platform implementation schematic in Figure 10-2.	
CLKXO	H1	24 MHz XTAL. Refer to platform implementation schematic in Figure 10-2.	
PRSTN	C3	Platform implementation specific	
CW_CSR_PRSTN	P15	No Connect	

Signal Name	Pad	Connection	√
PMU_PWR_EN	K3	Enables VDD_PG voltage rail.	
DFU	C2	Platform implementation specific	
ISP_SCL	M10	(RESERVED) No Connect	
ISP_SDA	N9	(RESERVED) No Connect	
VQPSQ	L3	(RESERVED) No Connect	
VQPSM	M3	(RESERVED) No Connect	
REFPADCLKP	D6	(RESERVED) No Connect	
REFPADCLKM	E6	(RESERVED) No Connect	
JTAG			
TDI	L13	Routed to Test Point or pulldown resistor of 4.7 - 10K Ohm if JTAG is not used.	
TDO	L14	Routed to Test Point	
TCLK	K14	Routed to Test Point or pulldown resistor of 4.7 - 10K Ohm if JTAG is not used.	
TMS	K15	Routed to Test Point or pulldown resistor of 4.7 - 10K Ohm if JTAG is not used.	
TRSTN	L15	Routed to Test Point	
POWER AND GROUND			
VDD		0.9 V	
VDD_PG		0.9 V	
USB_DVDD		0.9 V	
VPTX0		0.9 V	
VP		0.9 V	
*_AVDD		1.8 V	
VDDPLL		0.9 V	
VDDTS		1.8 V	
VDDPST18		1.8 V	
USB_VDD330		3.3 V	
VBUS0		VBUS Power Monitor Signal. VBUS0 signal level is at VBUS*(200k/(200k+30k)) using external voltage divider	
VSS		Ground	
*_AGND		Ground	

Figure 12-1. Vision Processor D4 Laser PWM Reference Platform Schematic

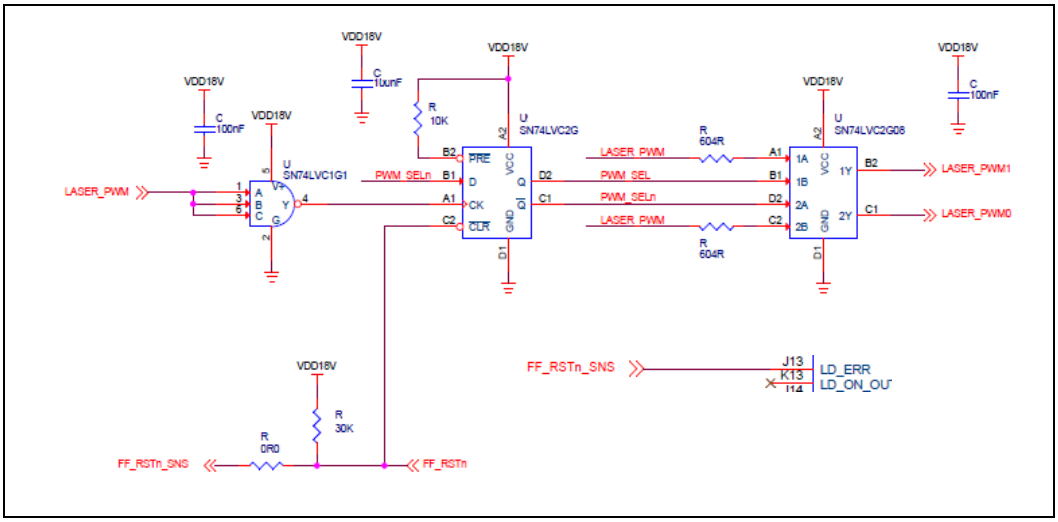

Figure 12-2. Vision Processor D4 24 MHz Crystal Clock Reference Platform Schematic

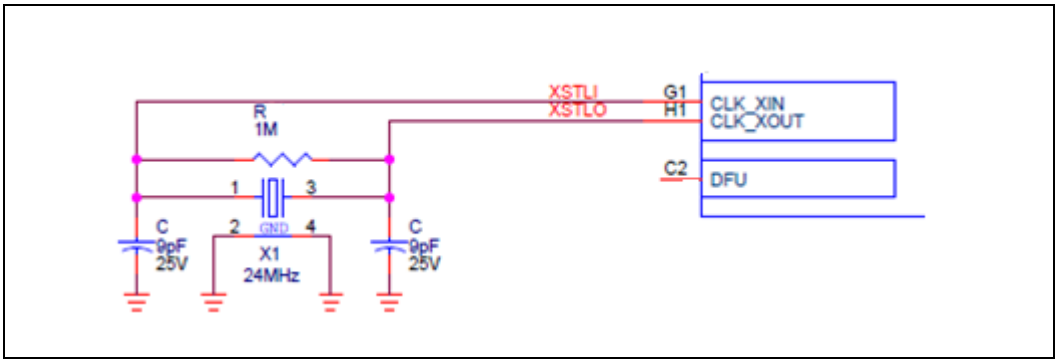

12.1 Power Delivery

The DC–DC power circuity discussed in this section must be followed for Vision Processor D4 on Motherboard designs. TPS62085R DC-DC converter (www.ti.com) generates 0.9 V and SC21150 (www.semtech.com) generates 1.8 V and 3.3 V voltage rails from 5 V to power Vision Processor D4, Stereo Depth Module.

Figure 12-3. DC-DC Reference Platform Schematic (3.3 V, 1.8 V, 0.9 V)

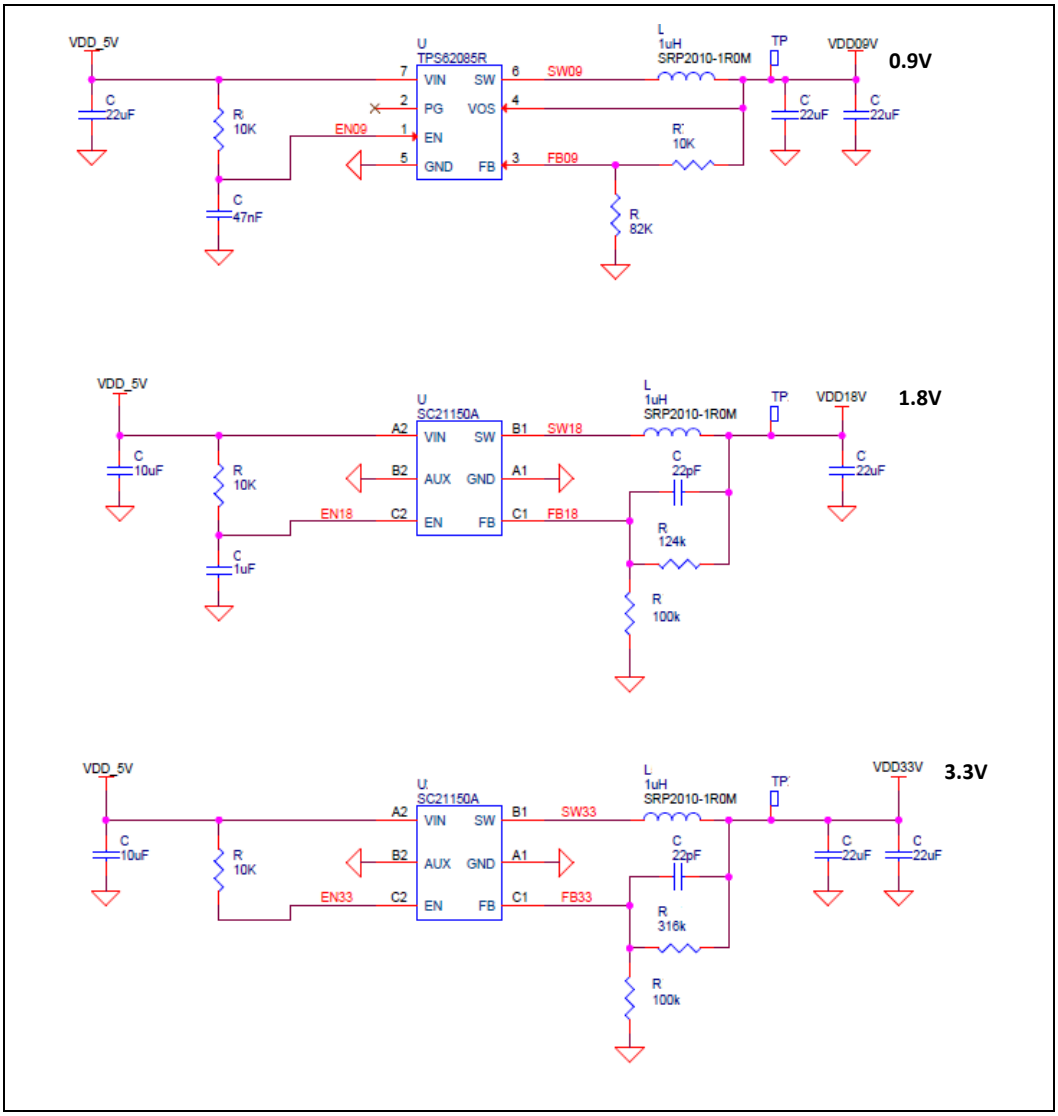

Figure 12-4. Vision Processor D4 VDD_PG and AVDD Reference Platform Schematic

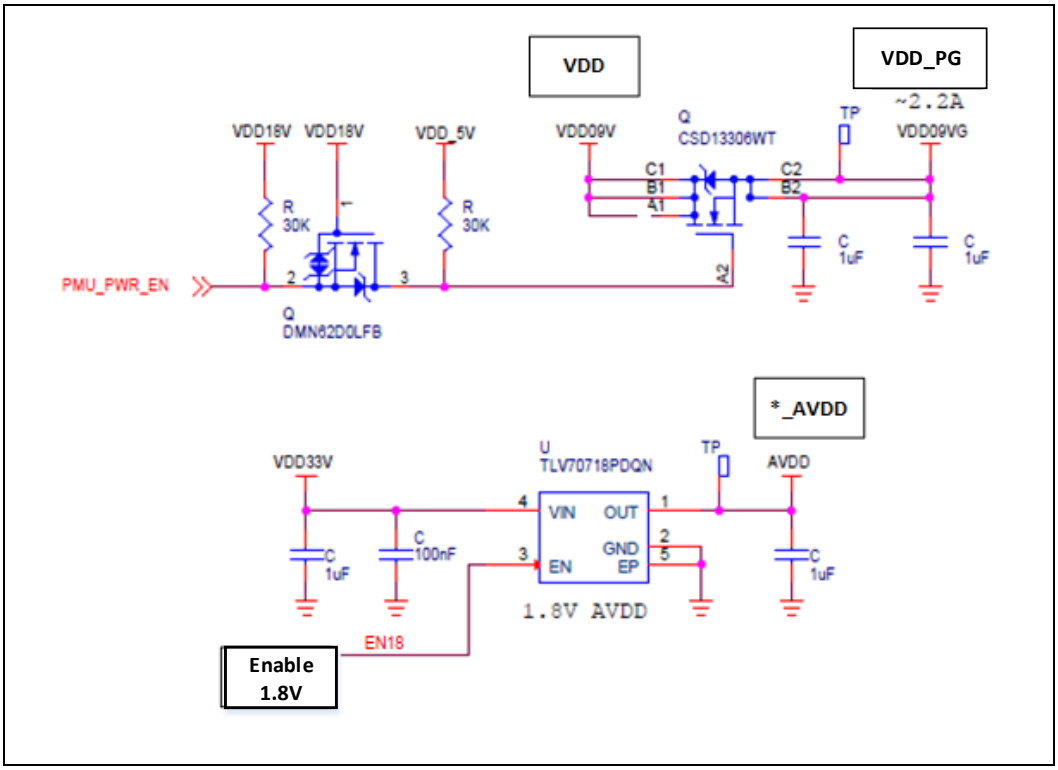

Table 12-2. Vision Processor D4 Decoupling and Filter Requirements

Voltage Ball Name	Decoupling	Filter	Notes
VDD	4X 100 nF		
VDD_PG	8X 100 nF		
USB_DVDD	2X 100 nF	1X 100 nF 1X FERRITE BEAD 120 ohm	
VPTX0			
VP			
*AVDD	1X 100 nF		
VDDPLL	1X 100 nF	1X 100 nF 1X FERRITE BEAD 120 ohm	
VDDTS	1X 100 nF		
VDDPST18 (Left and Right)	1X 100 nF		
USB_VDD330	1X 100 nF		
VBUS0			

13 Appendix B – Cover Material

Cover materials placed over the camera sensor must be carefully selected to avoid impacting software performance. The following parameters are an example of a suitable cover material. Other solutions are also acceptable but careful design and validation work should be done to verify a solution will perform adequately.

Table 13-1. Example: Cover Material Parameters

Specification	Recommendation	Notes
Hardness	6H	Prevent Scratches
Flatness	0.05 mm	Minimize Distortion
Distance From Lens to Cover	Less than 8 mm (D410/D415) Less than 2 mm (D430)	Cover Material not to exceed 1 mm thickness
Thickness of Cover	0.55 mm ± 0.03 mm	Cover Material not to exceed 1 mm thickness
Coatings	AR inside and outside	Avoid Reflections
Transmission Wavelength Range	400 to 865 nm (Visible and Infrared) @ 98% transmission rate or higher at all viewing and transmitting angles	
Cover Tilt Tolerance	± 1.0°	